C007JD PARTS LIST FOR CC−J GROUP P.1/1

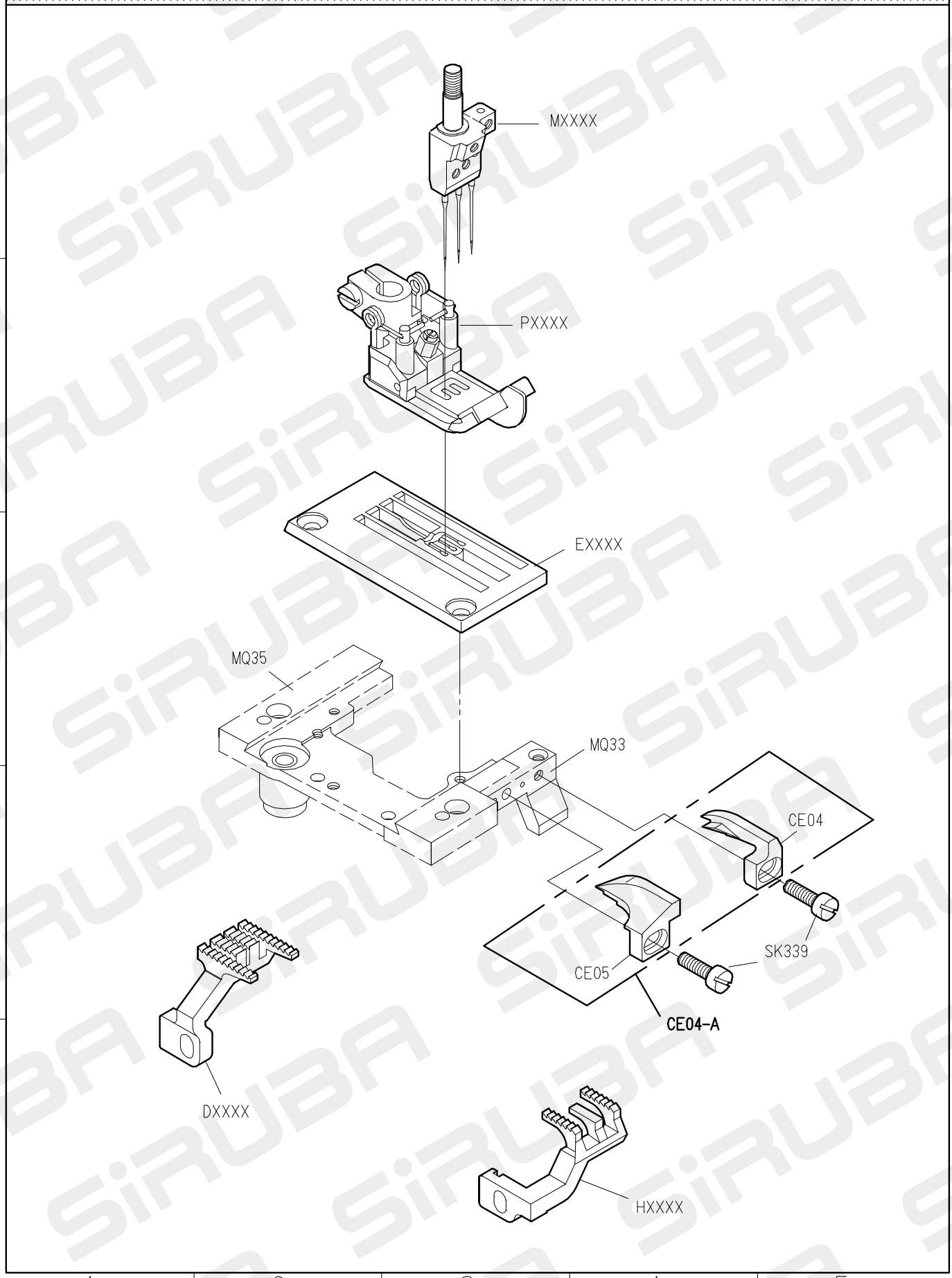

FOR C007J/C007JD/C858J/C858JD

10/07/01

C007JD PARTS LIST FOR CD-J GROUP P.1/1

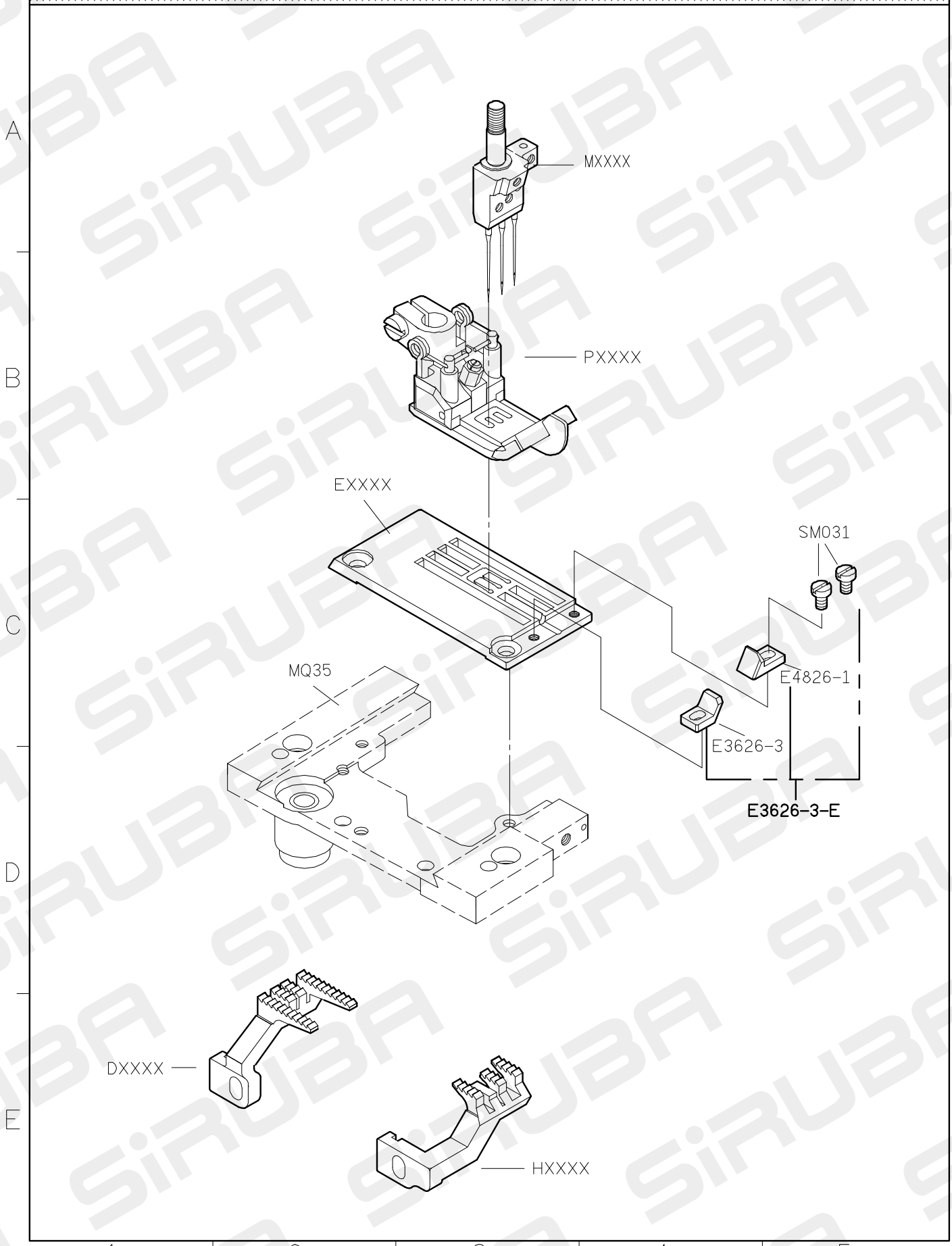

FOR C007J/C007JD/C858J/C858JD

10/07/01

C007JD PARTS LIST FOR CE-J GROUP P.1/1

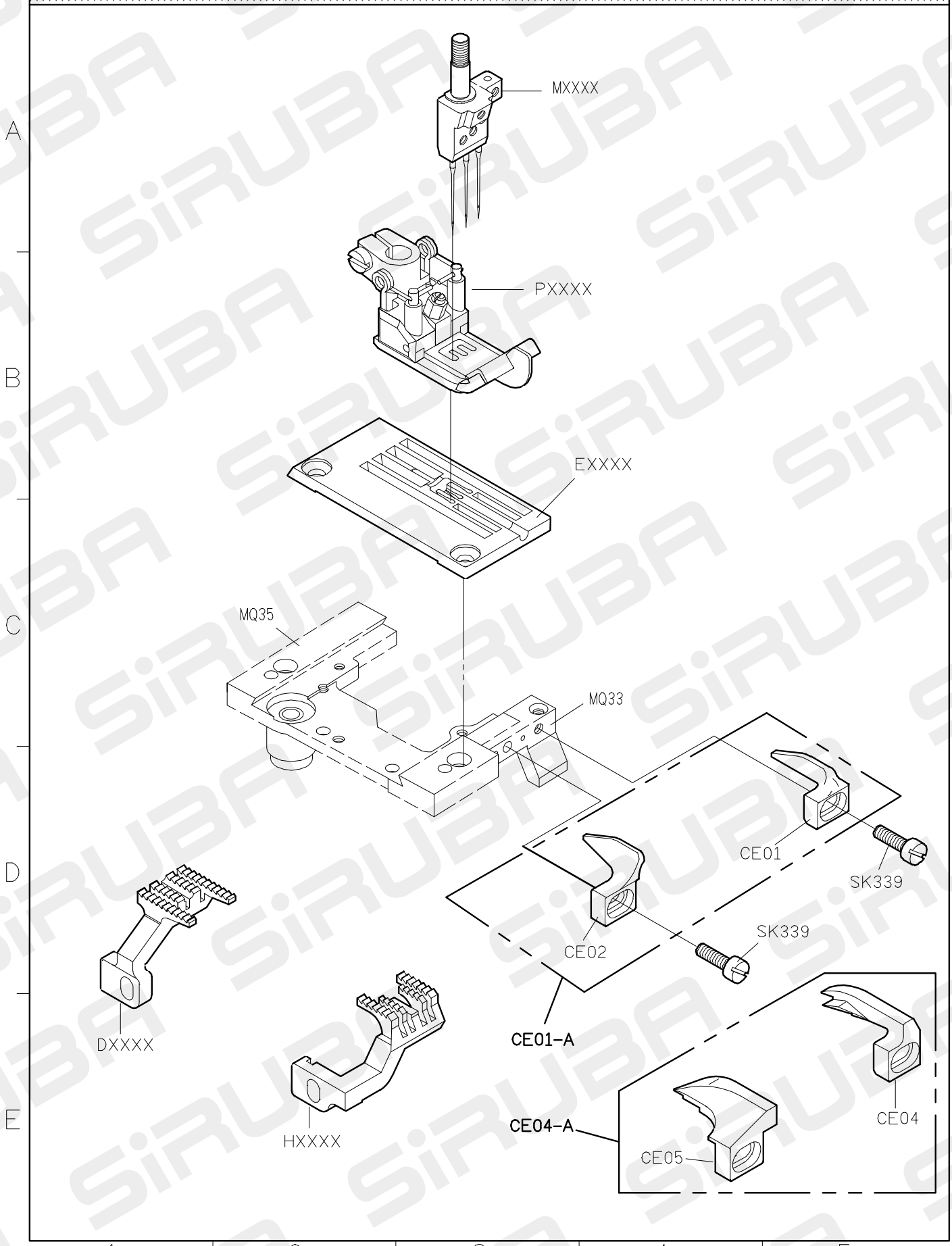

FOR C007J/C007JD/C858J/C858JD

10/06/05

C007JD PARTS LIST FOR CF−J GROUP

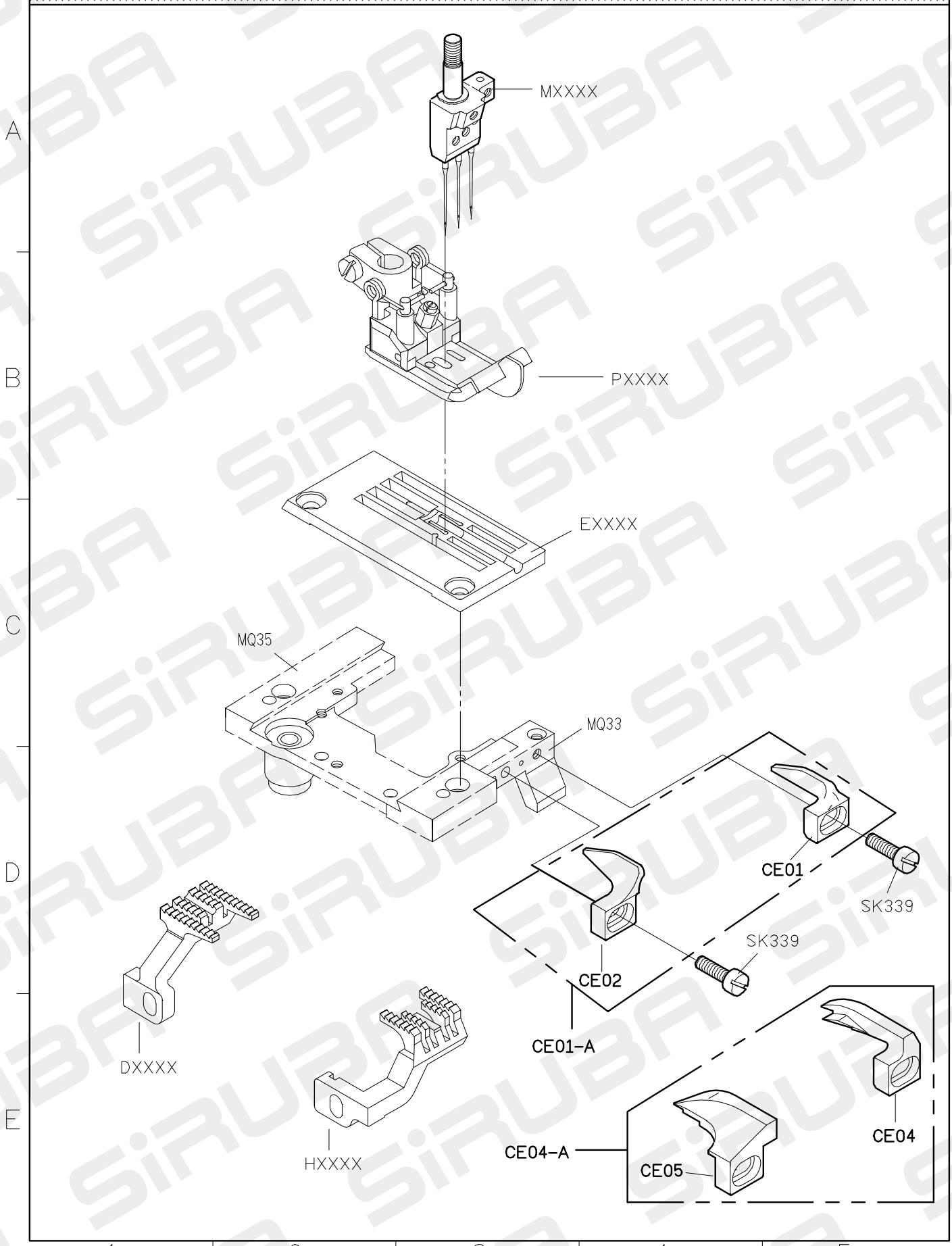

FOR C007J/C007JD/C858J/C858JD

10/07/01

C007JD PARTS LIST FOR CHA-J GROUP P.1/1

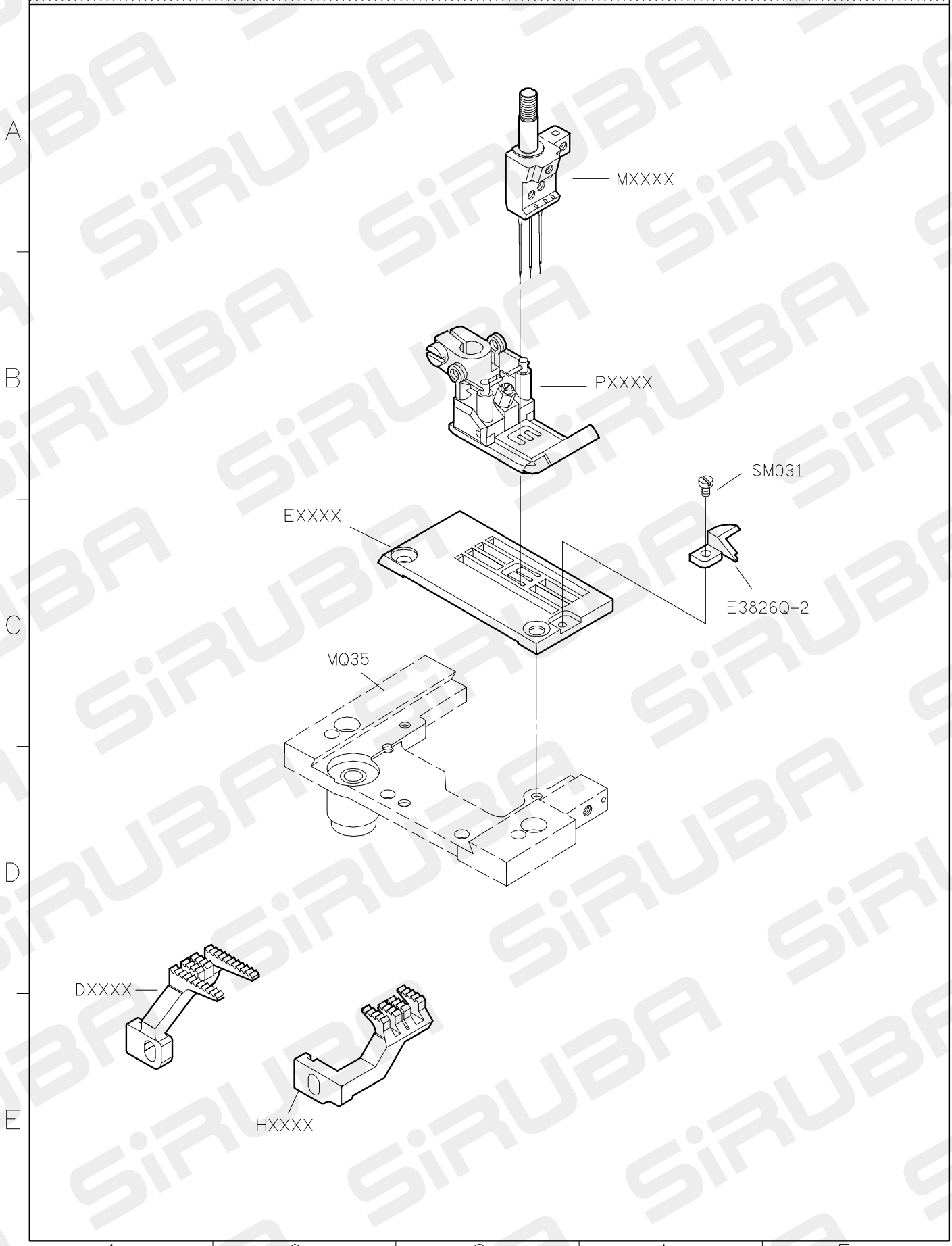

FOR C007J/C007JD/C858J/C858JD

10/07/01

C007JD PARTS LIST FOR CHE-J GROUP P.1/1

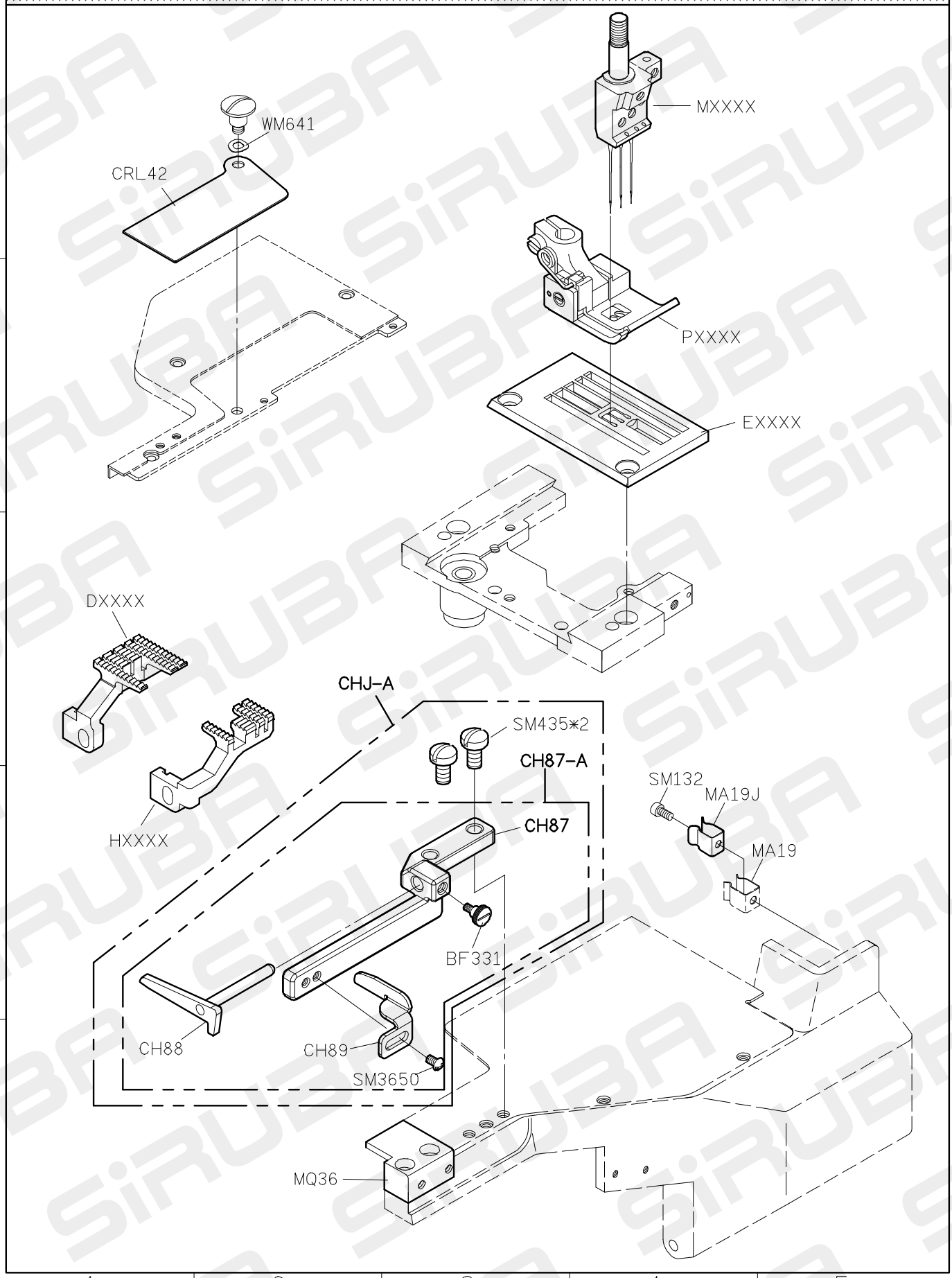

FOR C007J/C007JD/C858J/C858JD

10/07/01

C007JD PARTS LIST FOR CH−J GROUP P.1/1

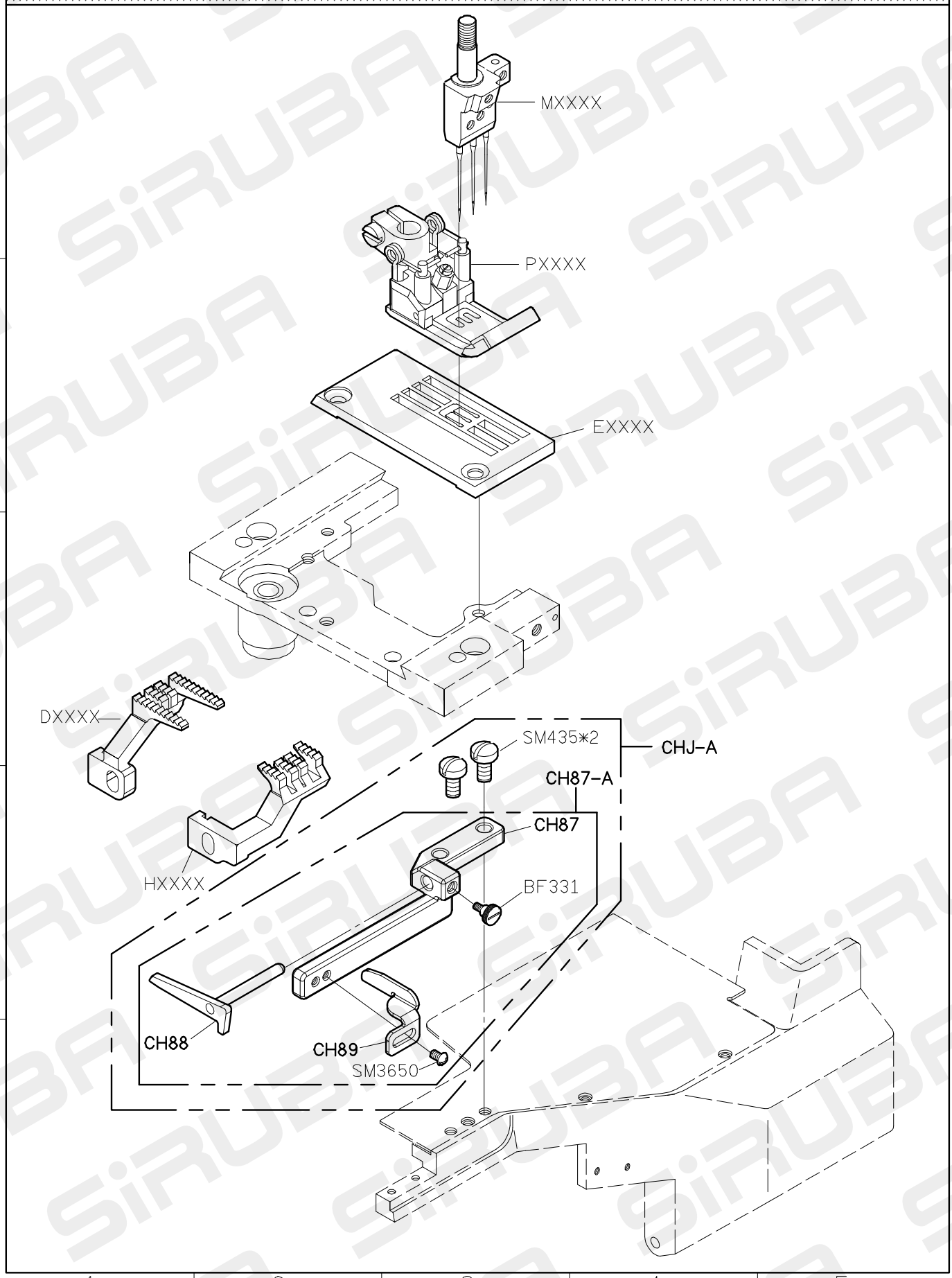

FOR C007J/C007JD/C858J/C858JD

10/07/01

C007JD PARTS LIST FOR CL−H GROUP P.1/2

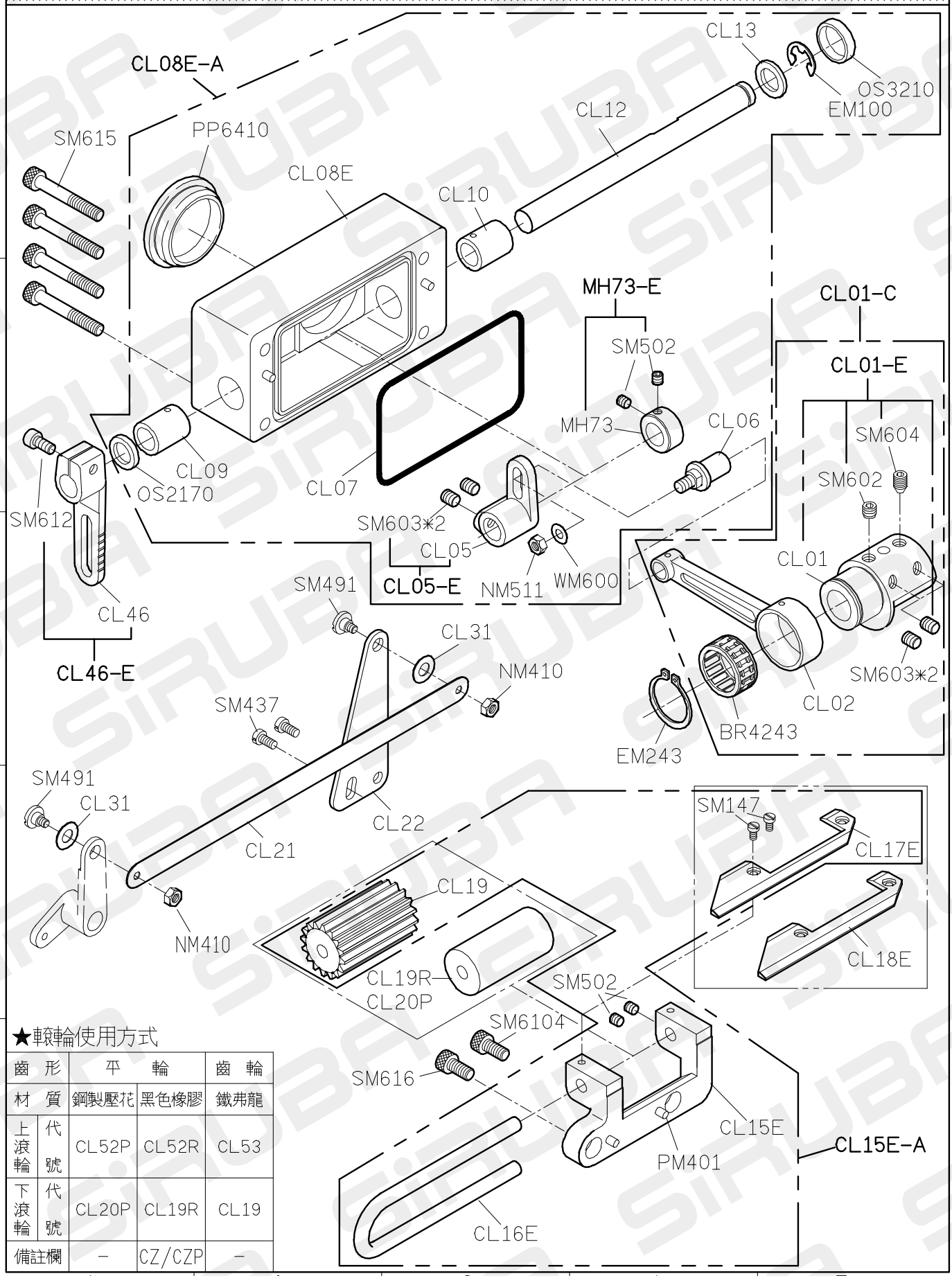

★輥輪使用方式

齒形		平輪		齒輪
材質		鋼製壓花	黑色橡膠	鐵弗龍
上滾輪	代號	CL52P	CL52R	CL53
下滾輪	代號	CL20P	CL19R	CL19
備註欄		−	CZ/CZP	−

FOR C007J/C007JD/C858J/C858JD

10/07/01

C007JD PARTS LIST FOR CL−H GROUP P.2/2

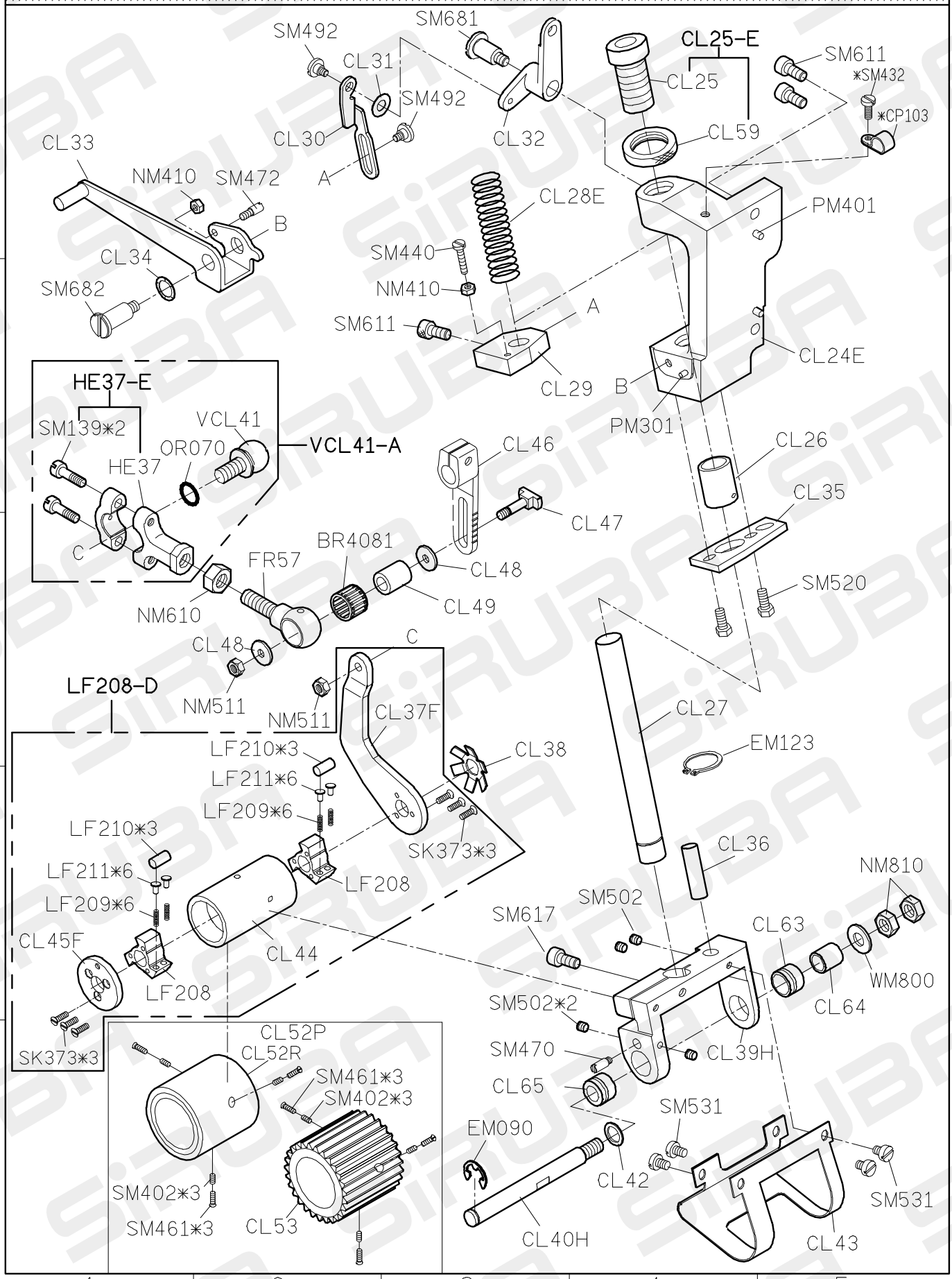

FOR C007J/C007JD/C858J/C858JD
* USE FOR UTP車型

10/07/01

C007JD PARTS LIST FOR CQA-J GROUP P.1/2

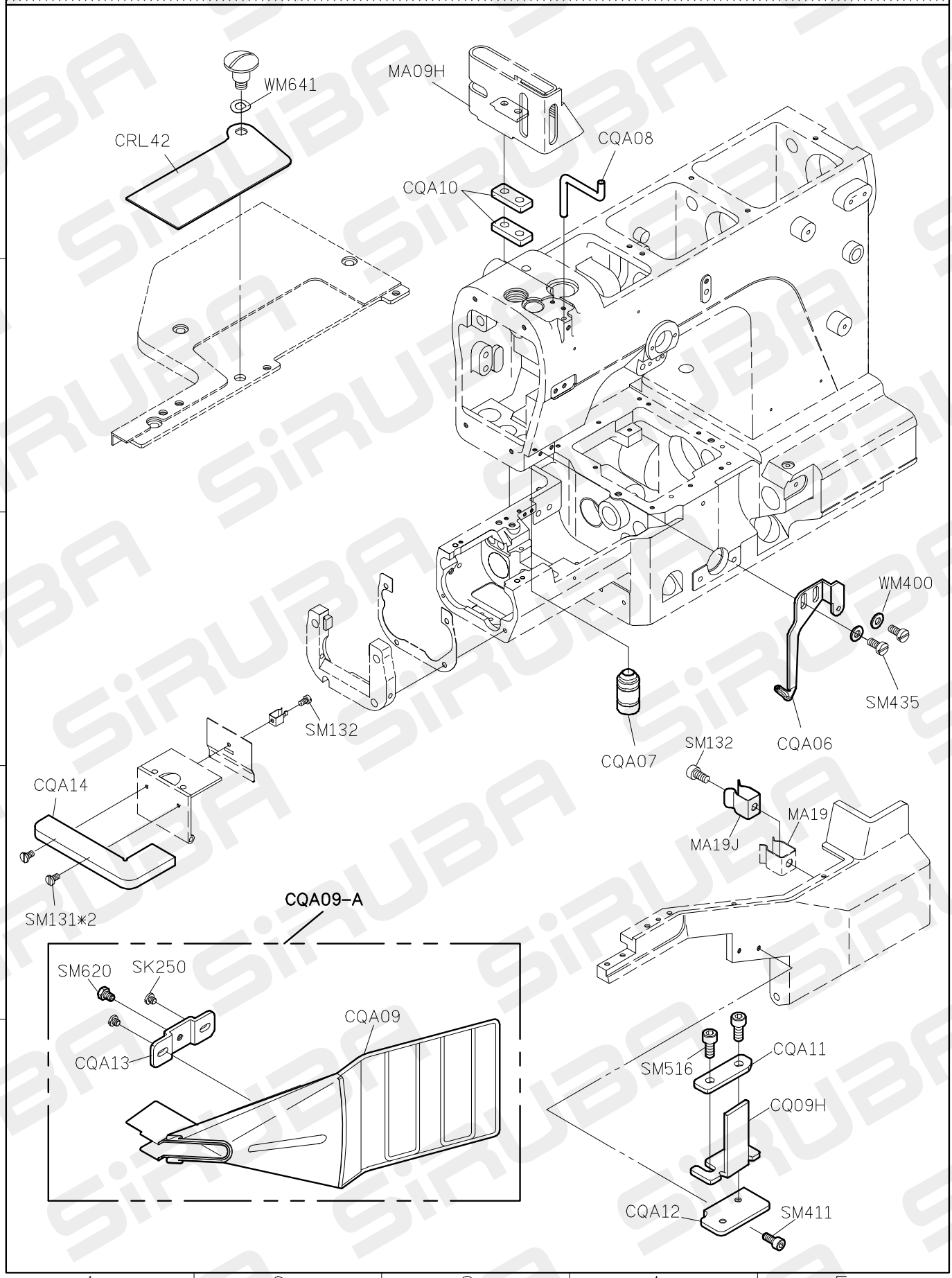

FOR C007J/C007JD/C858J/C858JD

10/07/01

C007JD PARTS LIST FOR CQA-J GROUP P.2/2

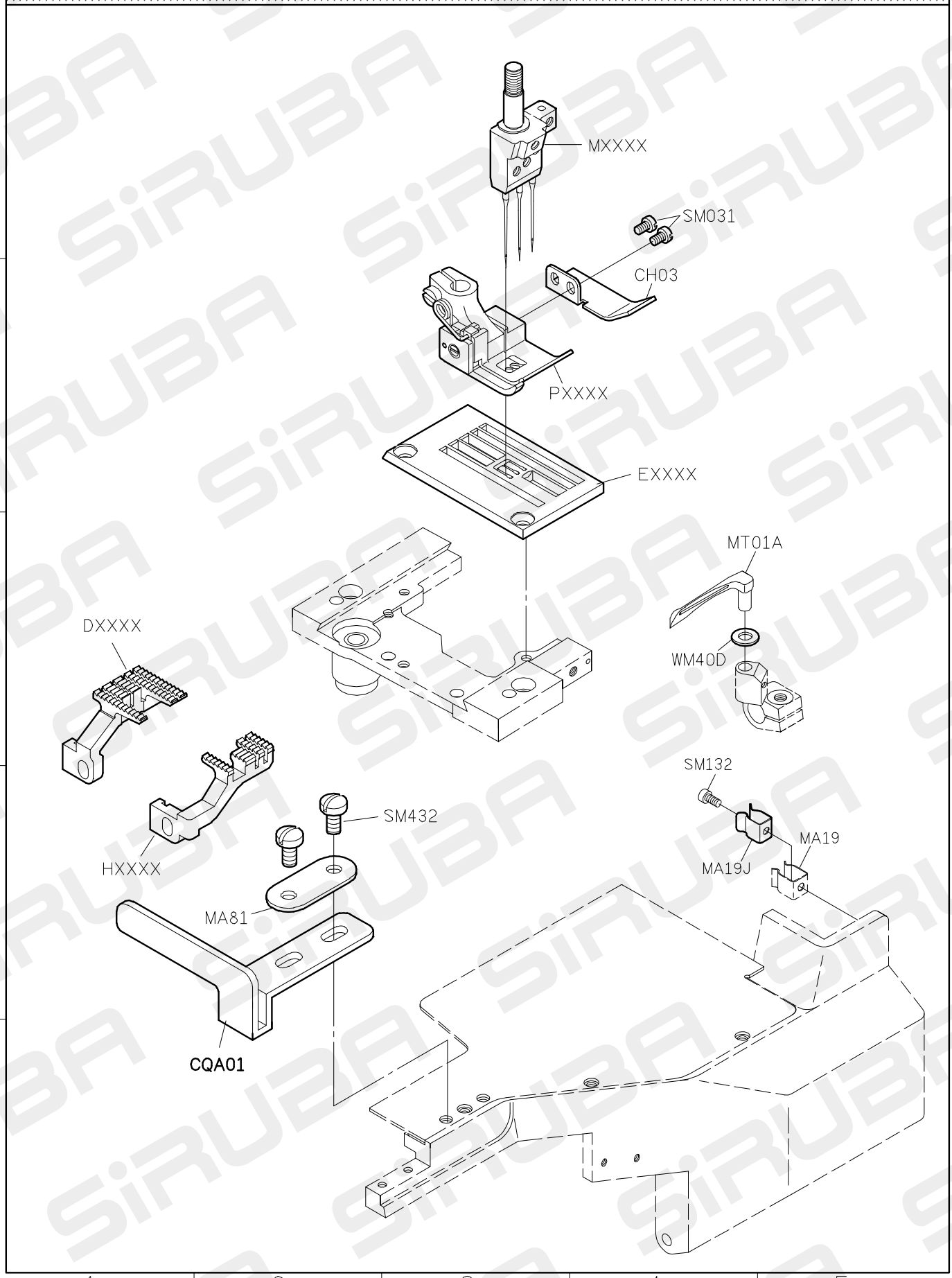

FOR C007J/C007JD/C858J/C858JD

10/07/01

C007JD PARTS LIST FOR CQ−J GROUP P.1/1

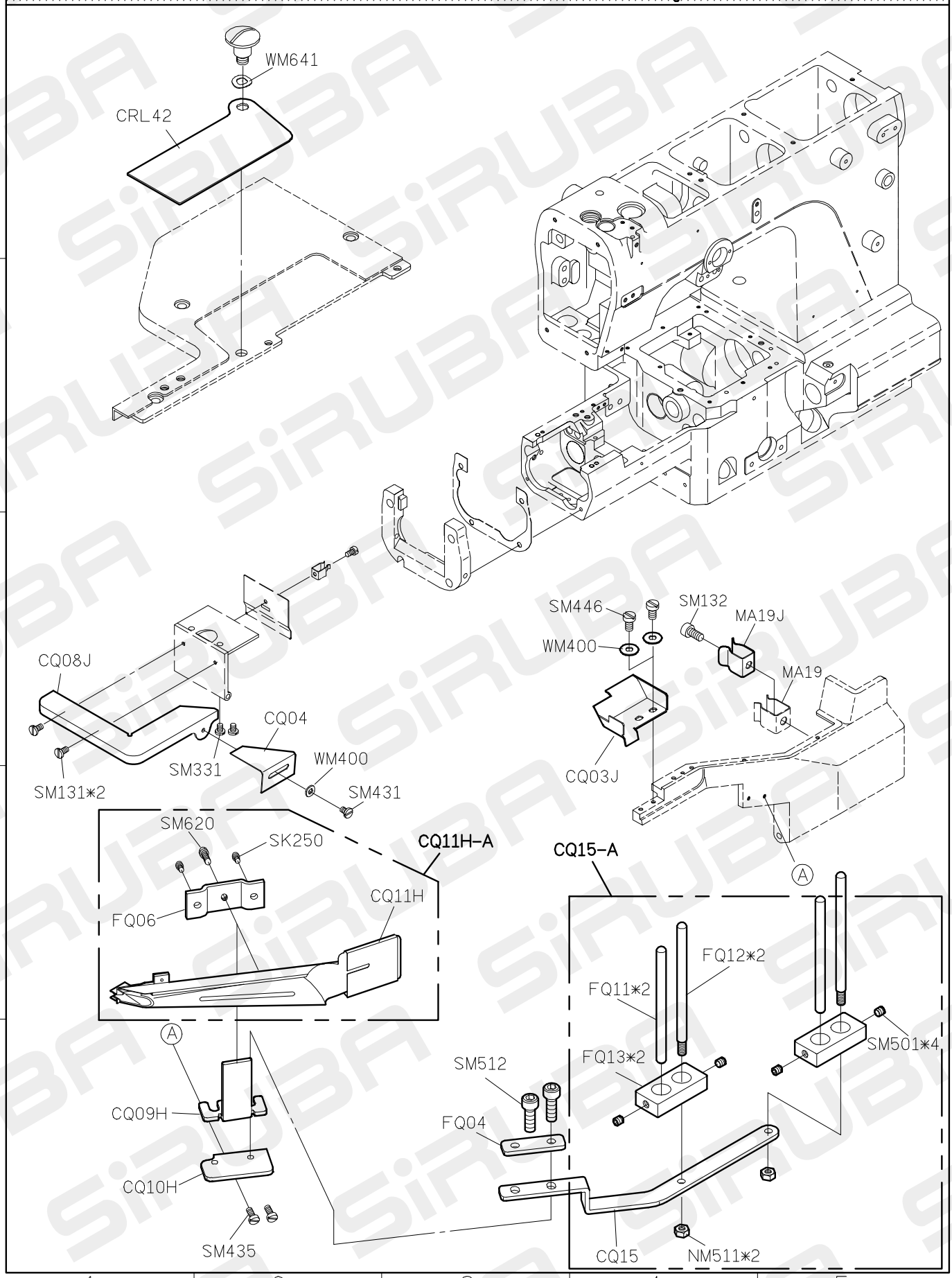

FOR C007J/C007JD/C858J/C858JD

10/07/01

C007JD PARTS LIST FOR CRA−J GROUP P.1/2

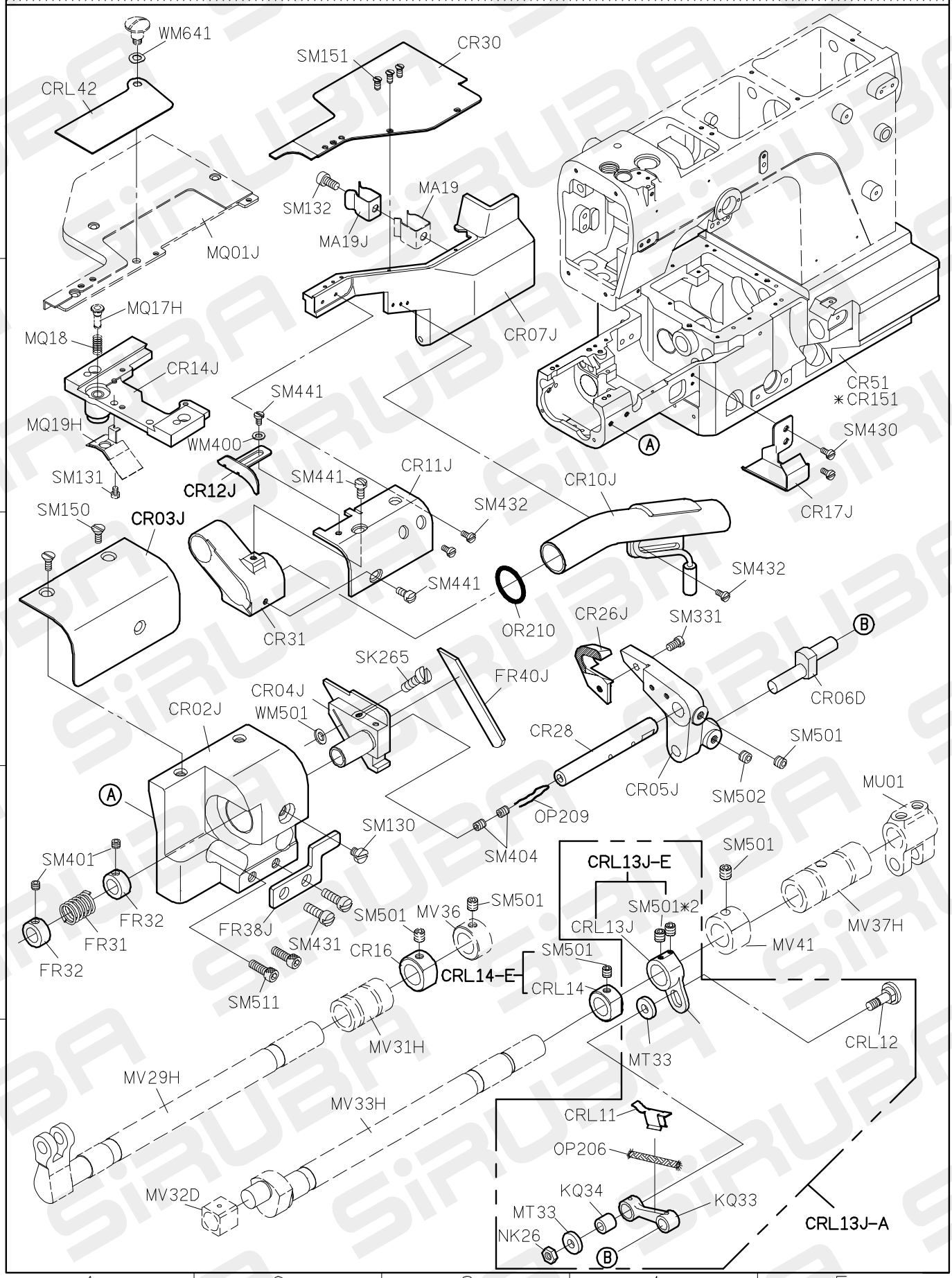

FOR C007J/C007JD/C858J/C858JD
"*" USE FOR C007JD/C858JD

10/06/22

C007JD PARTS LIST FOR CRA-J GROUP P.2/2

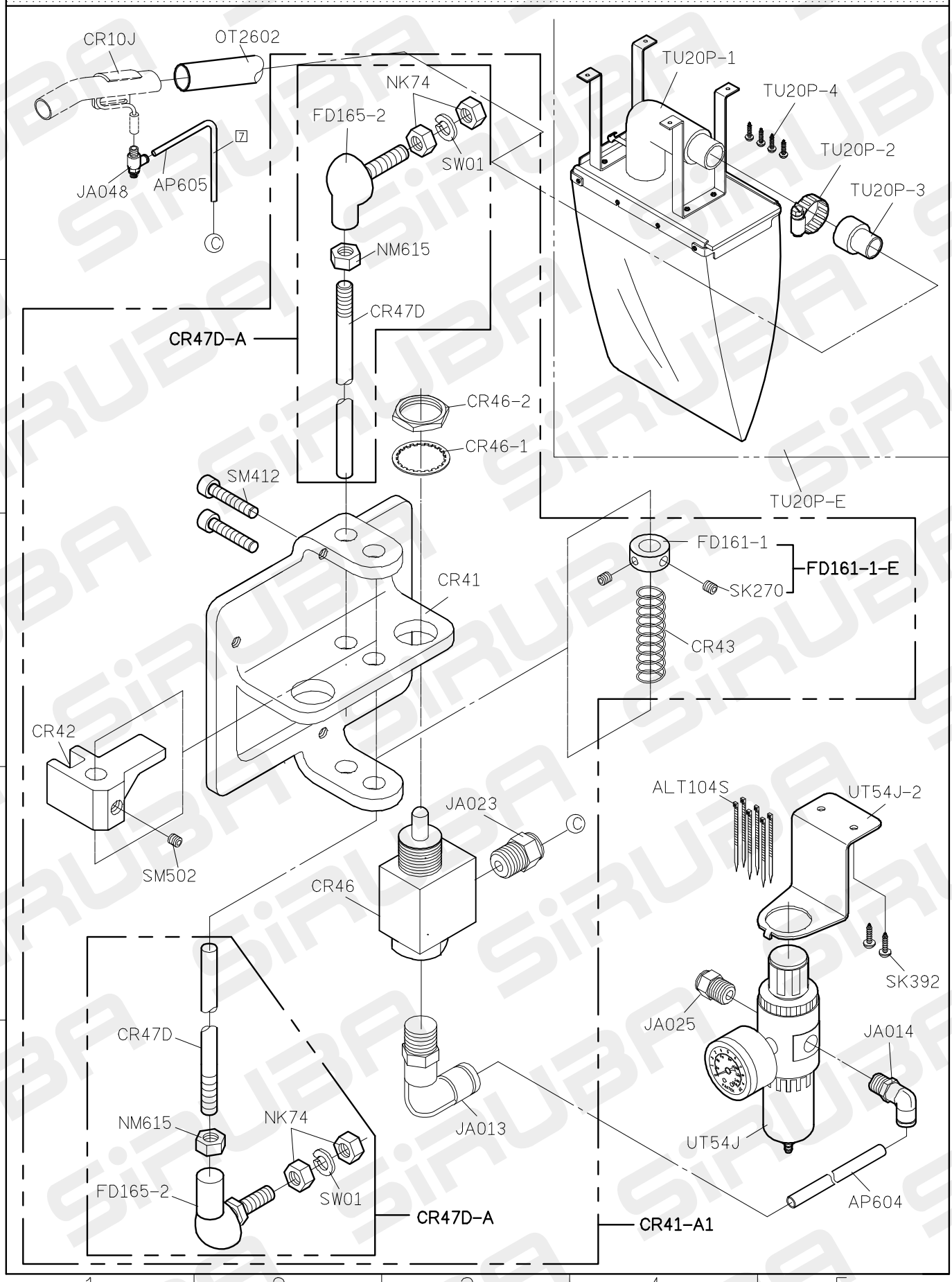

FOR C007J/C007JD/C858J/C858JD

10/07/01

C007JD PARTS LIST FOR CRB−J GROUP P.1/2

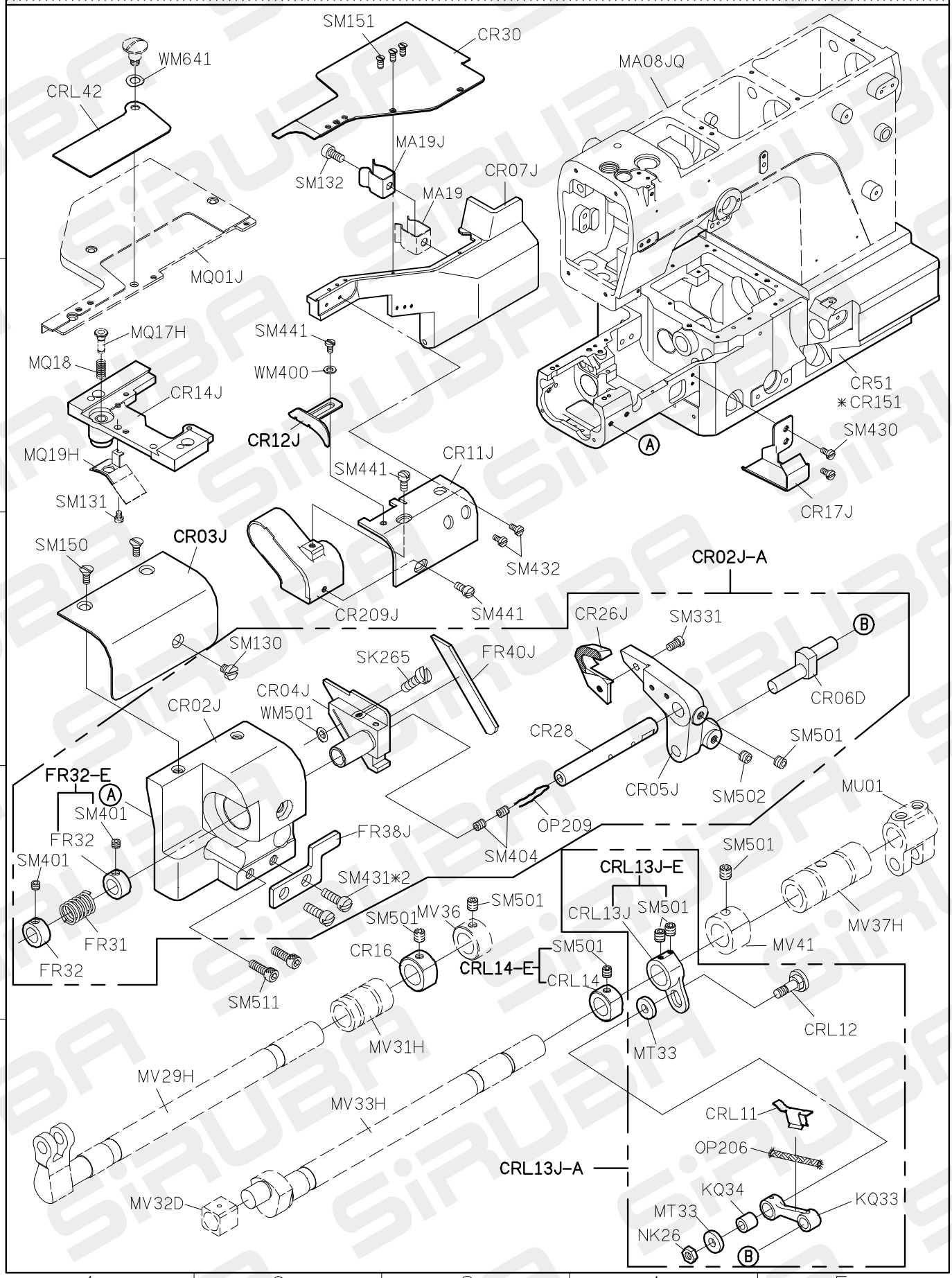

FOR C007J/C007JD/C858J/C858JD

"*" USE FOR C007JD/C858JD

10/06/22

C007JD PARTS LIST FOR CRB-J GROUP P.2/2

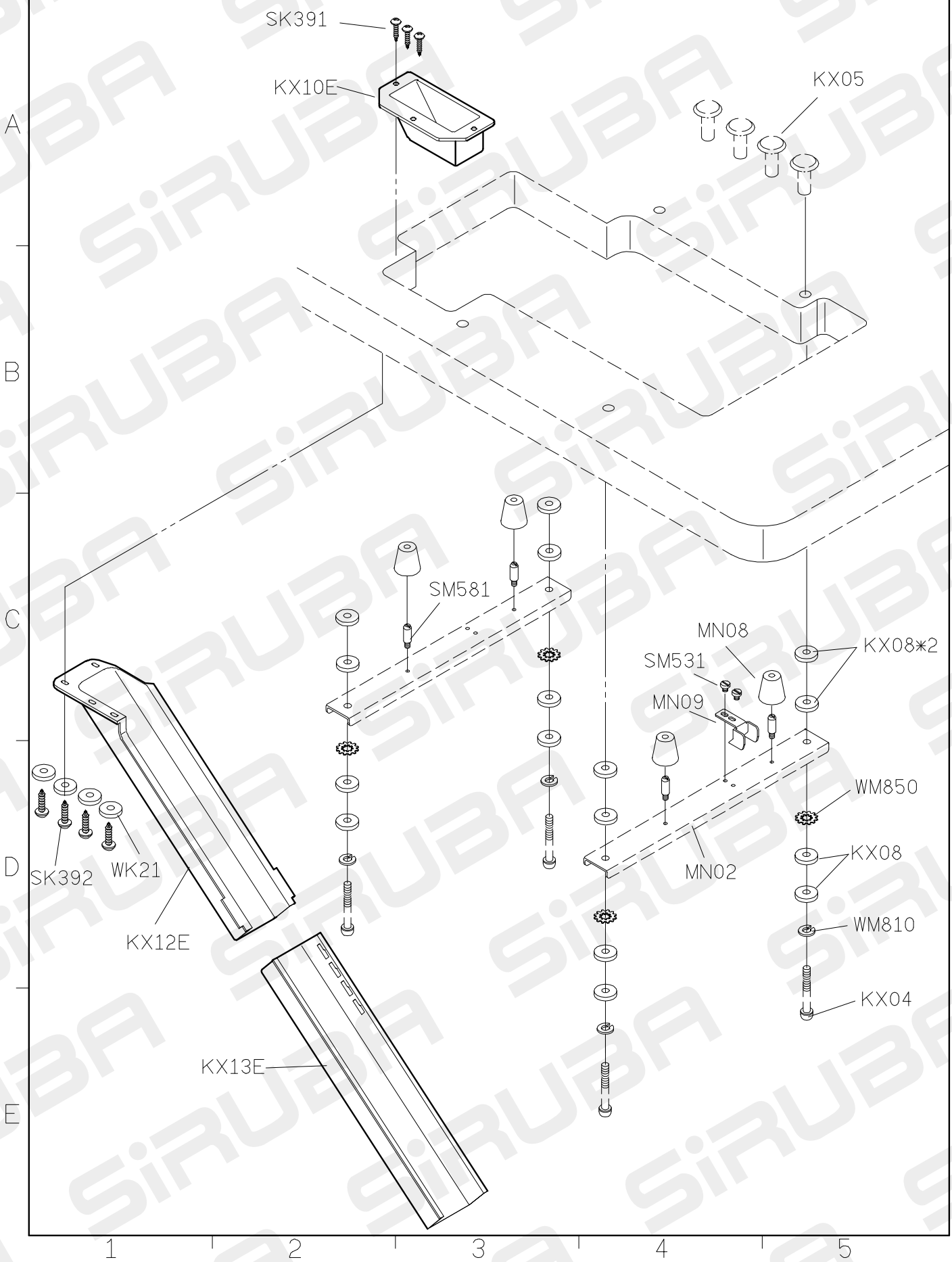

FOR C007J/C007JD/C858J/C858JD
"*" USE FOR C007JD/C858JD

10/07/01

C007JD PARTS LIST FOR CRL−J GROUP P.1/2

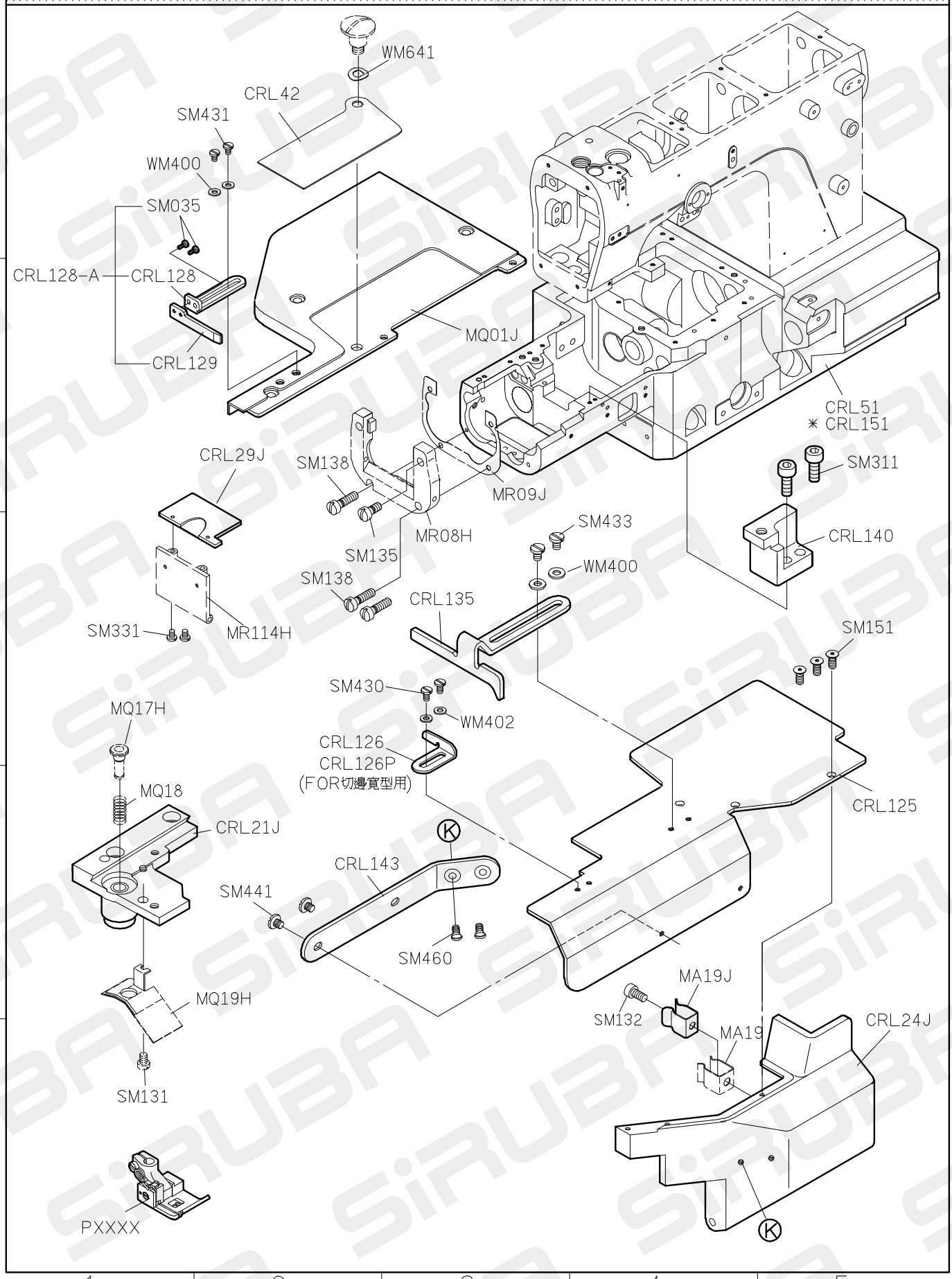

"＊"USE FOR C007JD/C858JD

10/07/01

C007JD PARTS LIST FOR CRL-J GROUP P.2/2

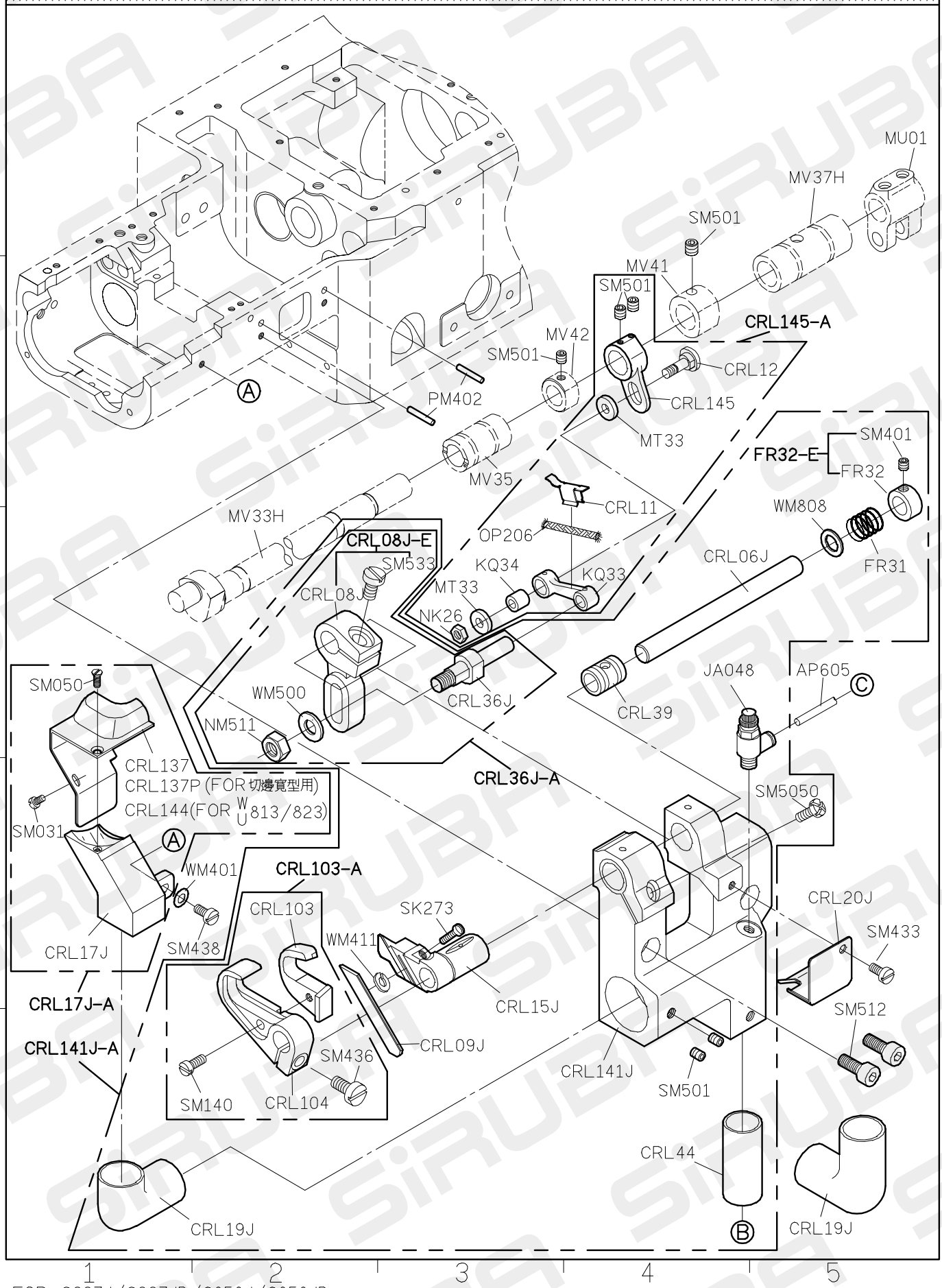

FOR C007J/C007JD/C858J/C858JD

註:(1)CRL 813/823 針棒行程為 34mm ，CRL103 切布刀最高點時,刀尖離針板面為 7mm .

(2)訂購 CRL137P 時,附贈 CRL137/CRL126

10/07/01

C007JD PARTS LIST FOR CRL-J GROUP P.1/1

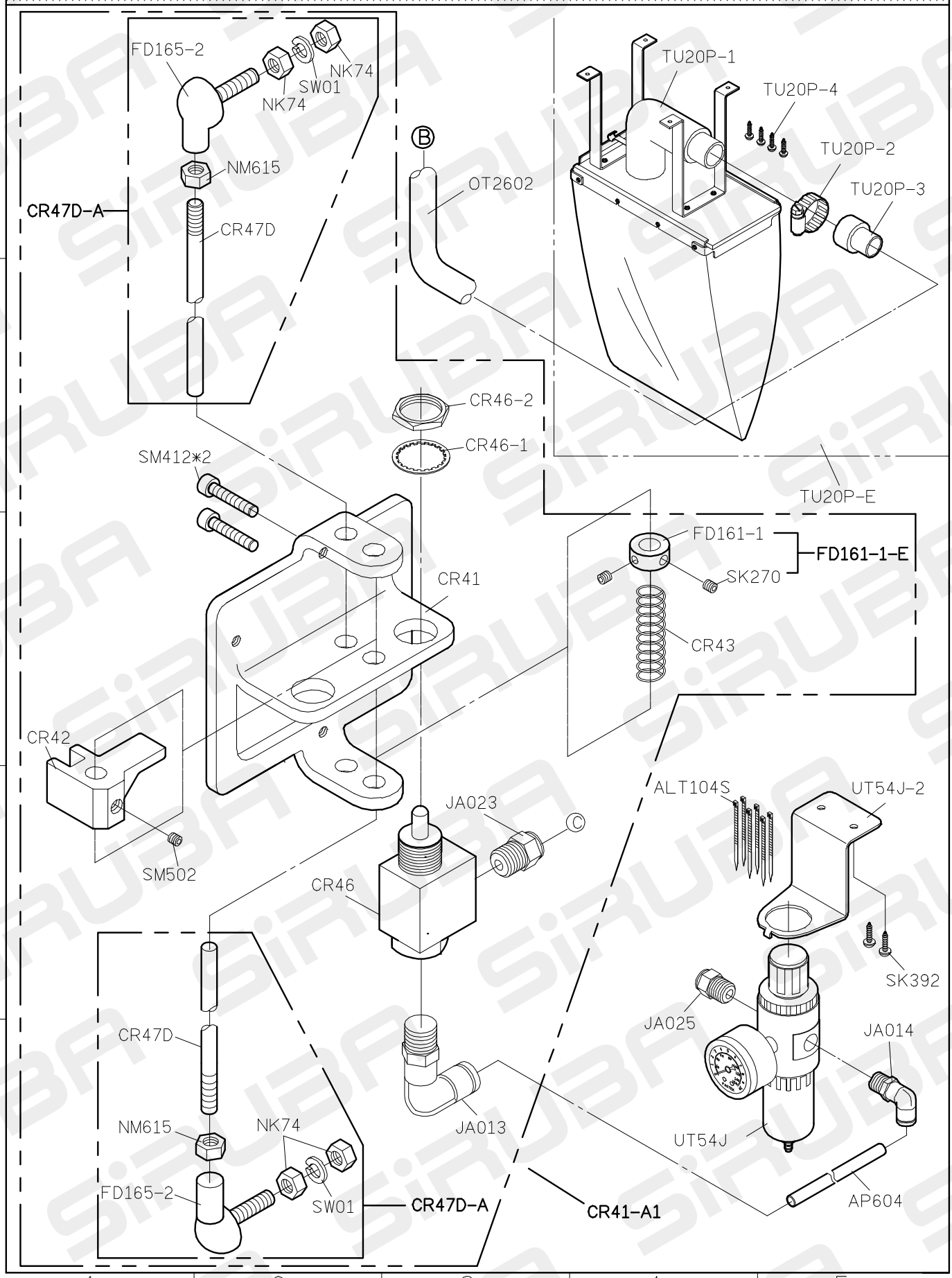

FOR C007J/C858J
C007JD/C858JD

10/07/01

C007JD PARTS LIST FOR CR−J GROUP P.1/2

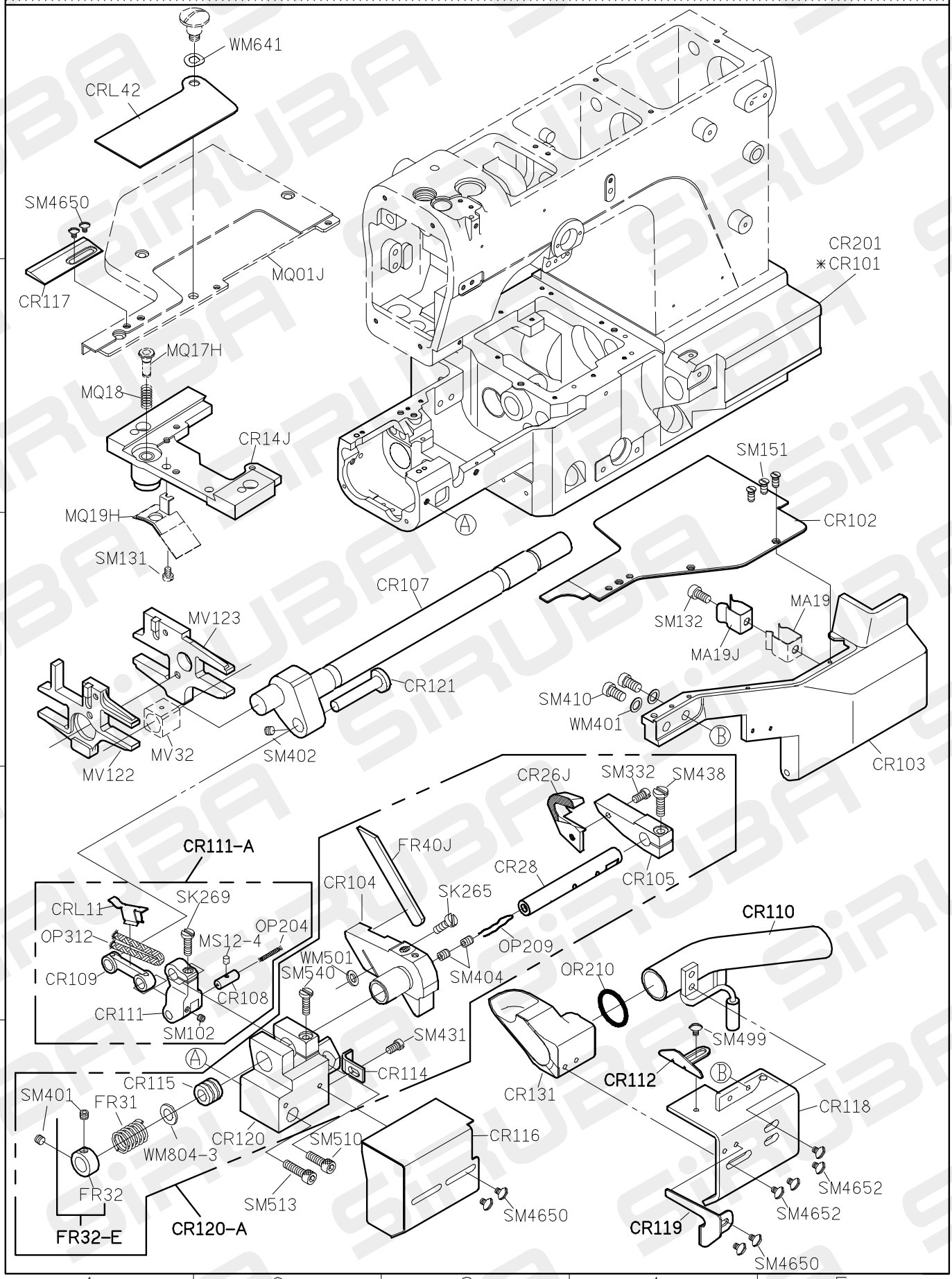

FOR C007J/C007JD/C858J/C858JD
"*" FOR C007JD/C858JD

10/06/21

C007JD PARTS LIST FOR CR−J GROUP P.2/2

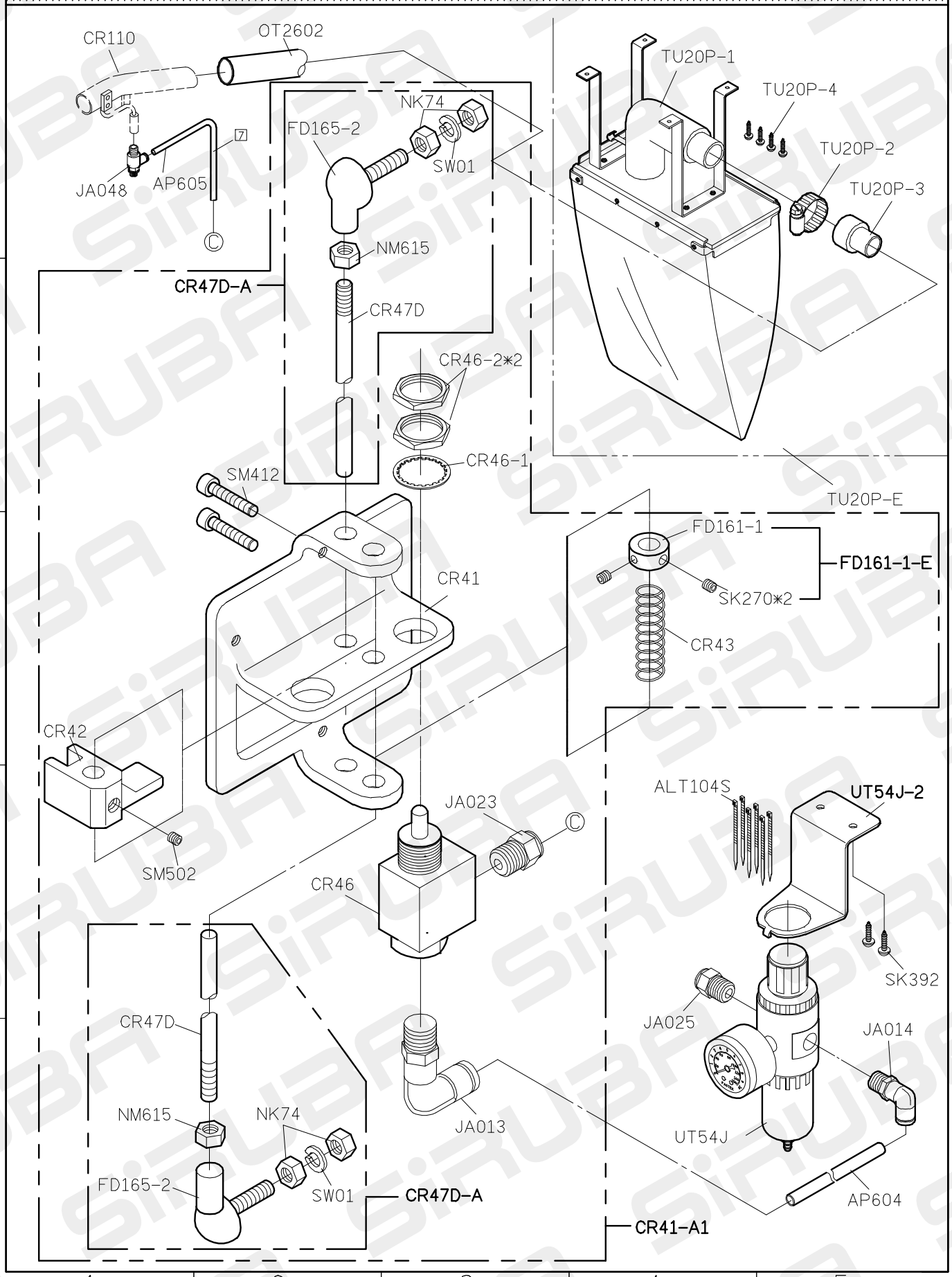

C007JD PARTS LIST FOR CW GROUP P.1/3

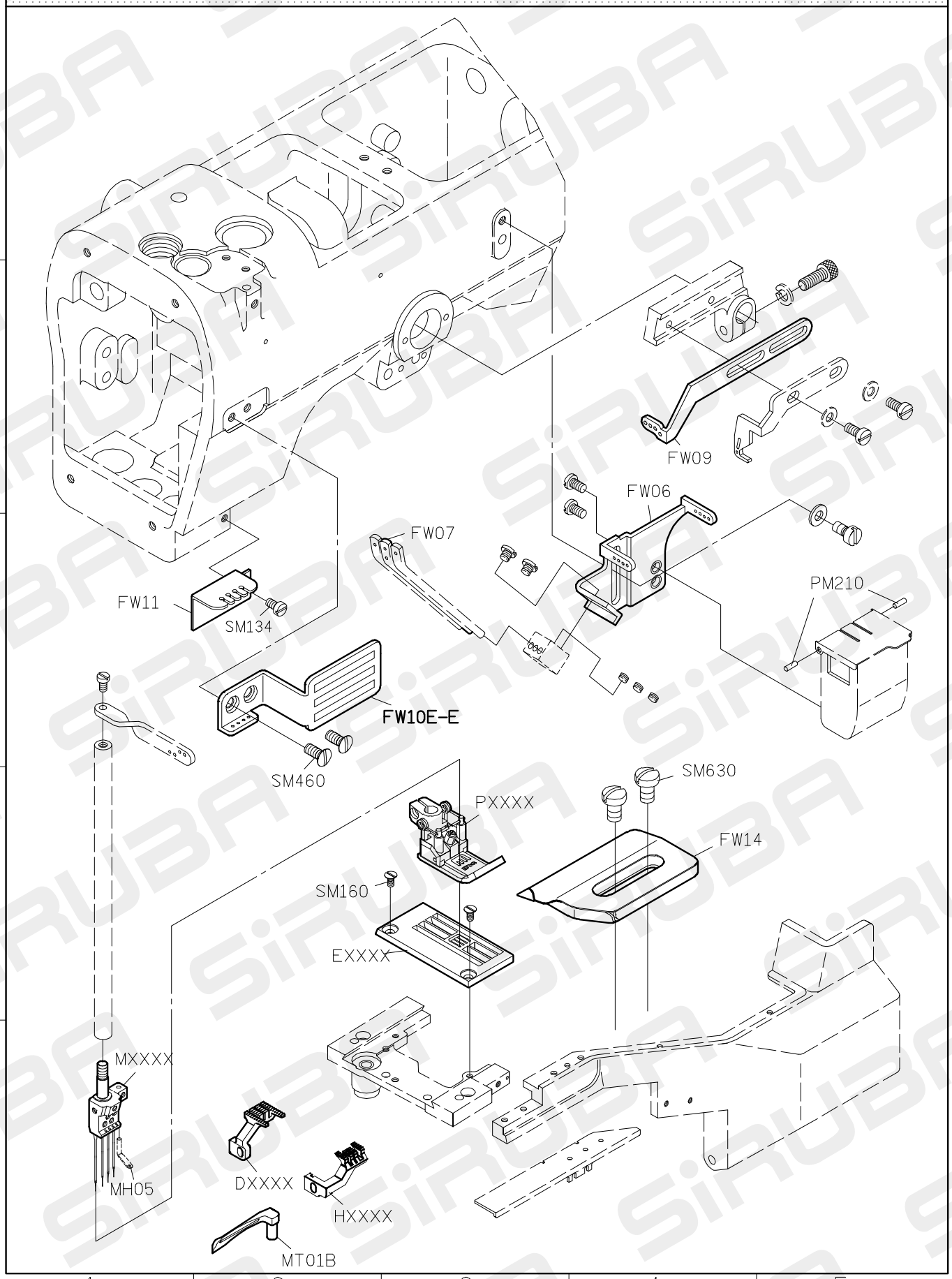

FOR C007J/C007JD/C858J/C858JD

10/07/01

C007JD PARTS LIST FOR CW GROUP P.2/3

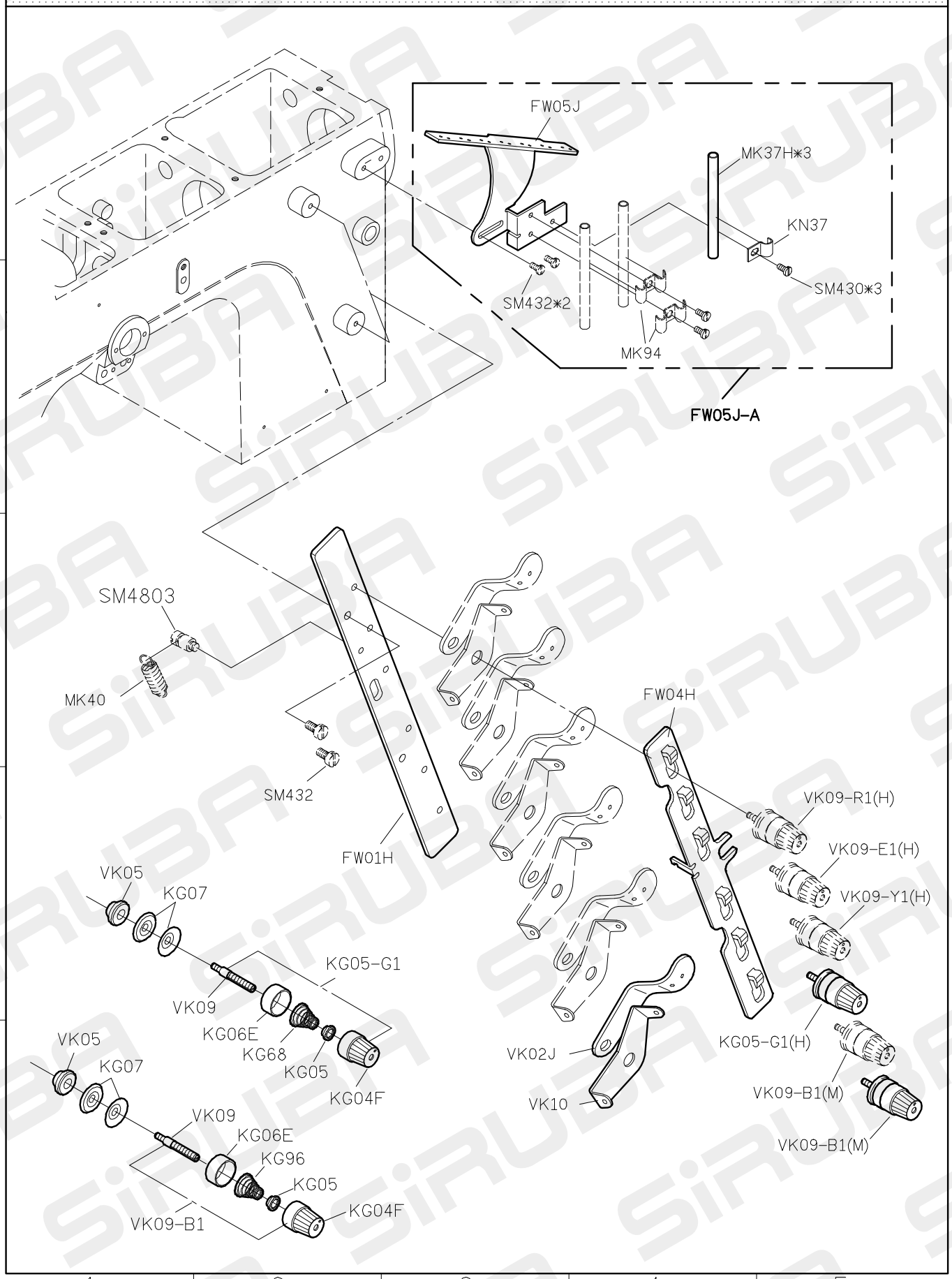

C007JD PARTS LIST FOR CW GROUP P.3/3

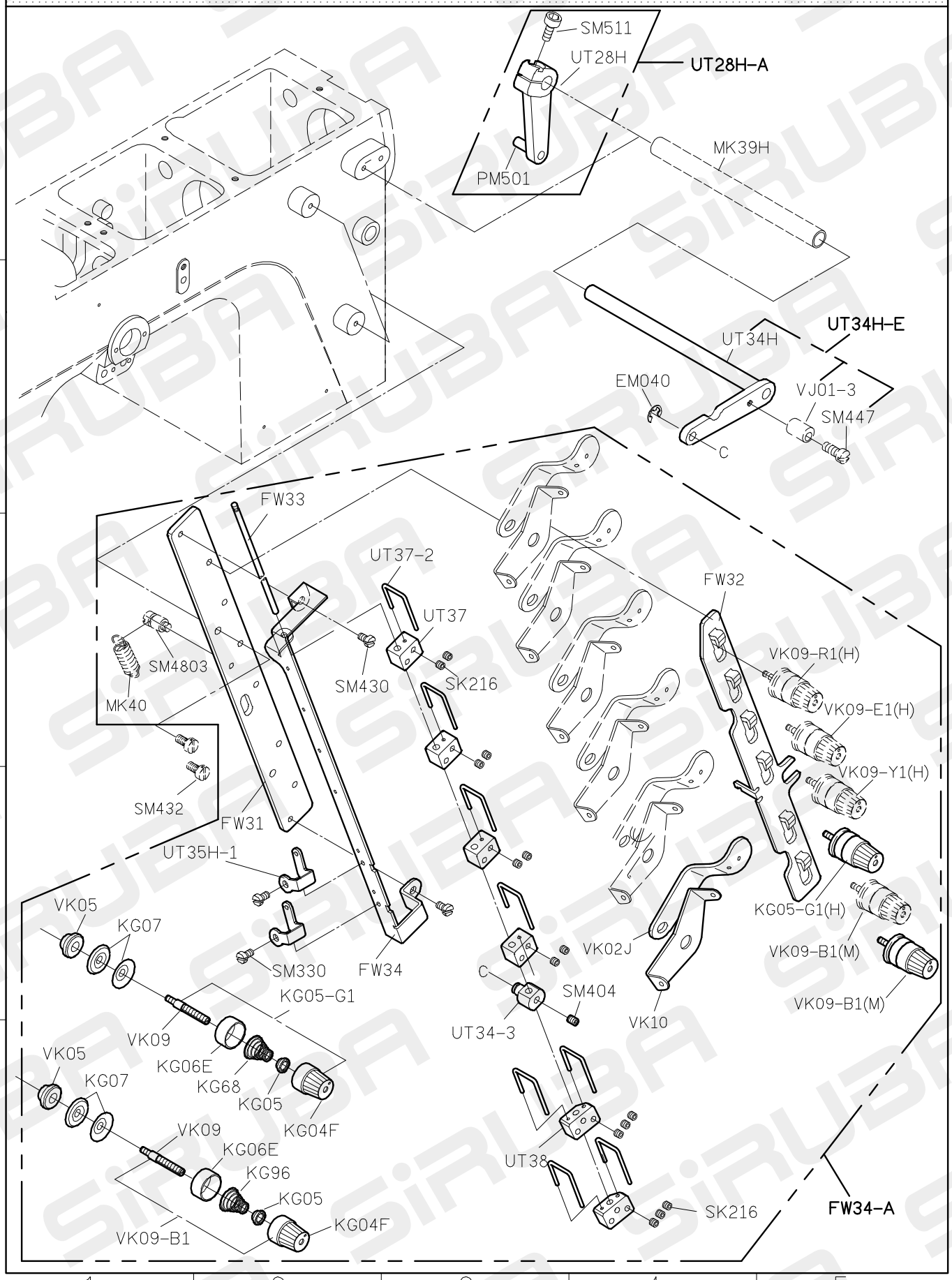

FOR CW-UT/FW-UT

10/07/01

C007JD PARTS LIST FOR CX−A GROUP P.1/3

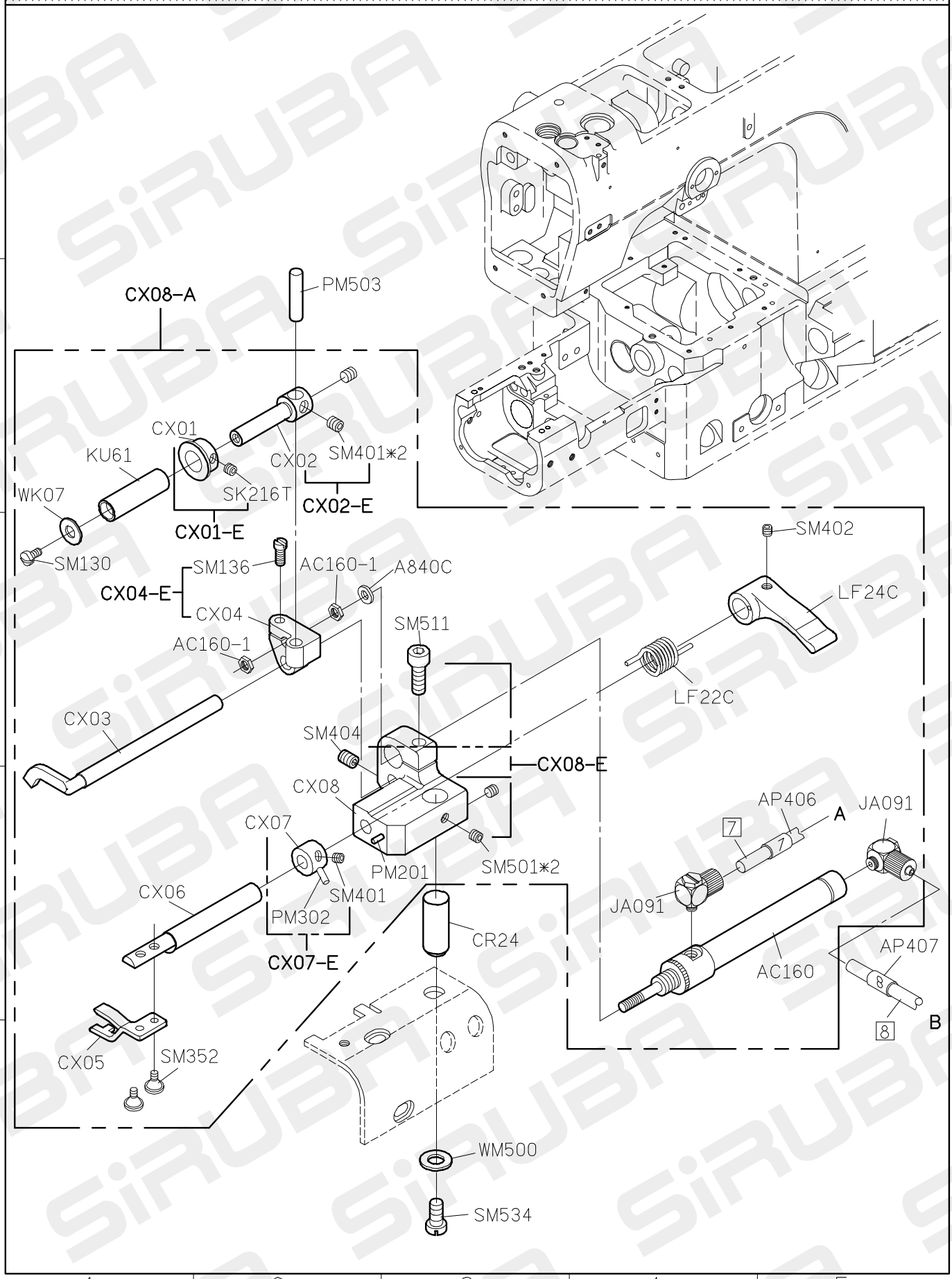

FOR C007J/C007JD/C858J/C858JD
"*" USE FOR C007JD/C858JD

10/07/01

C007JD PARTS LIST FOR CX−A GROUP P.2/3

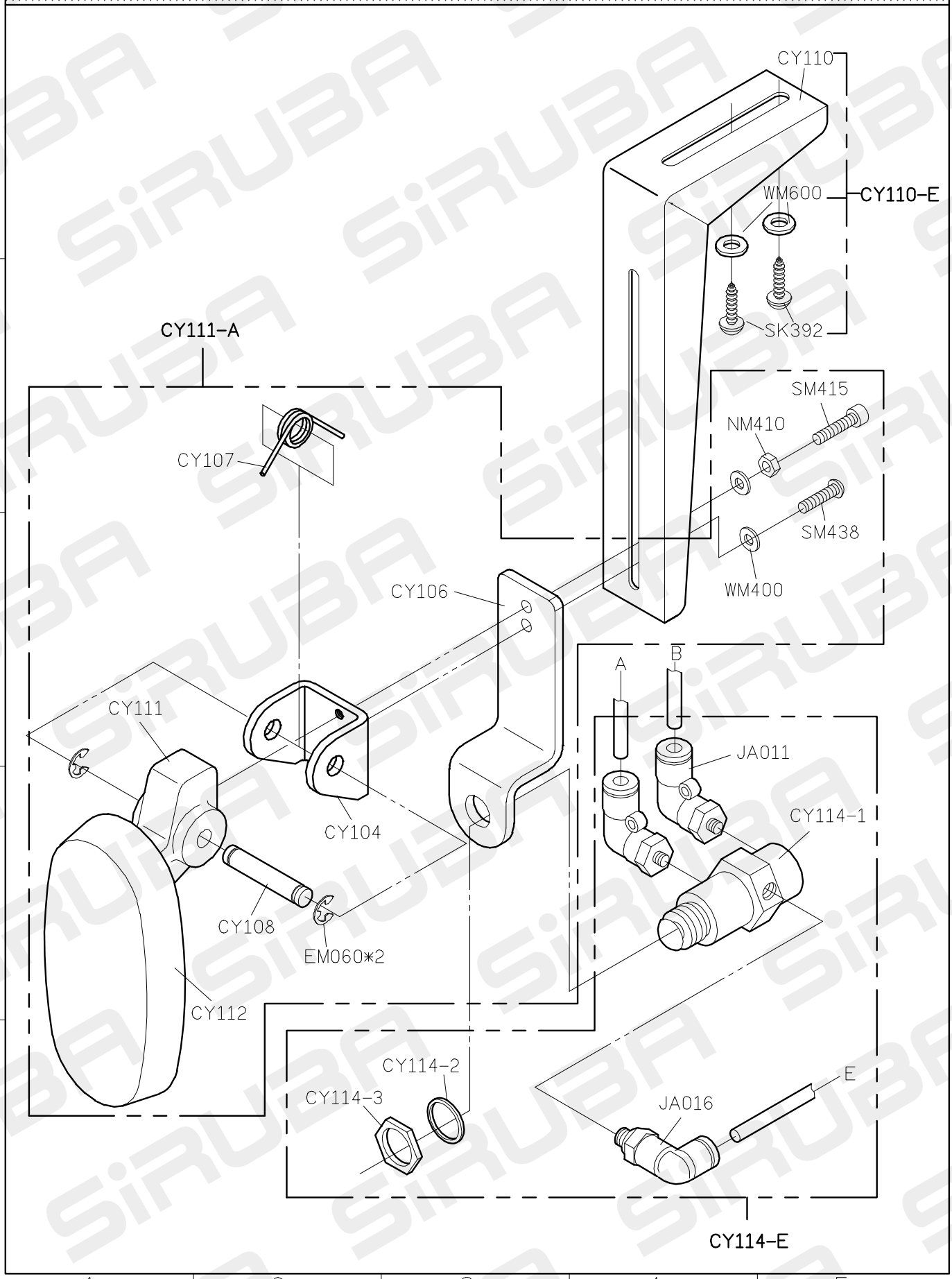

FOR C007J/C007JD/C858J/C858JD

10/07/01

C007JD PARTS LIST FOR CX-A GROUP P.3/3

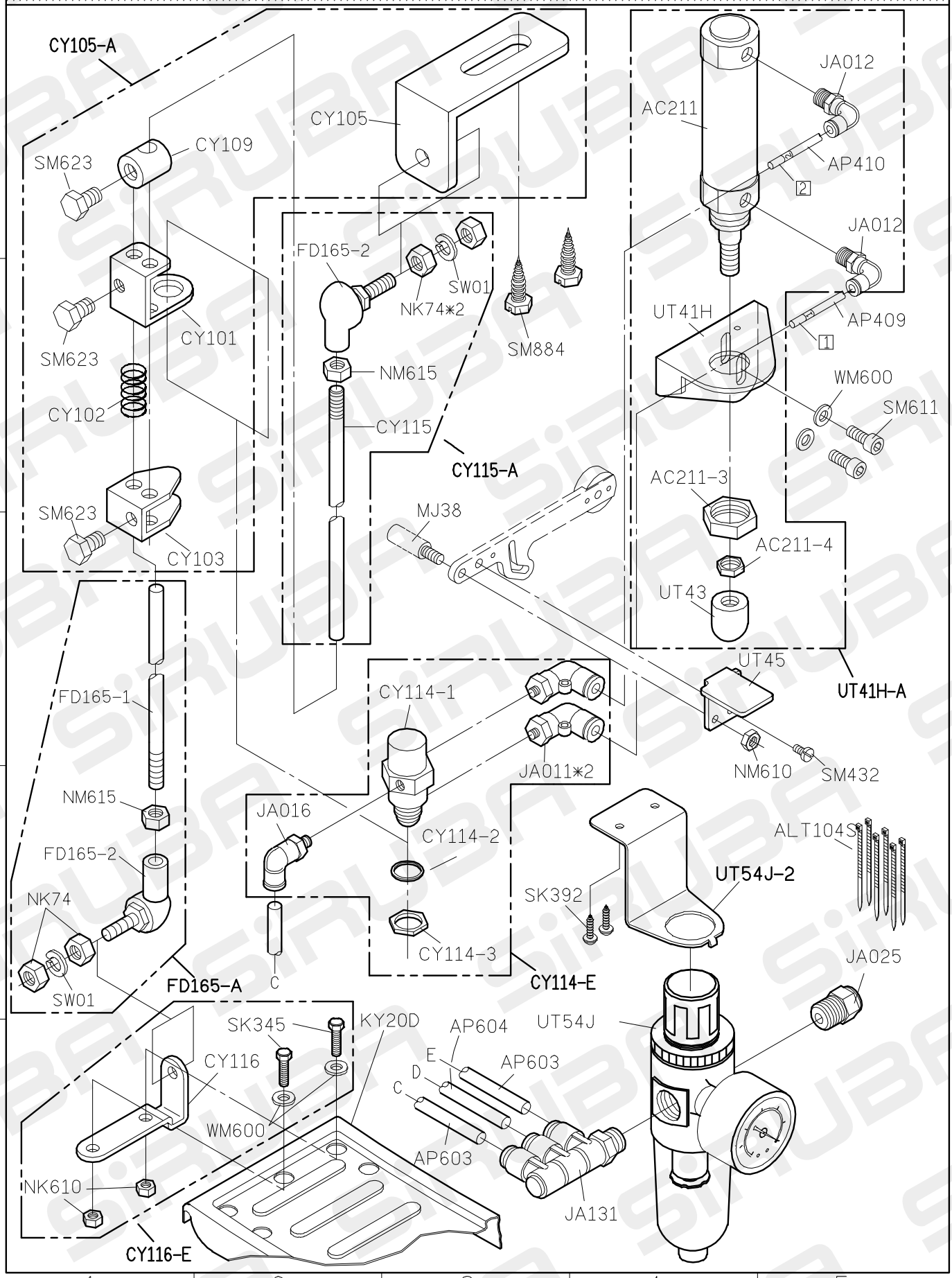

FOR C007J/C007JD/C858J/C858JD

10/07/01

C007JD PARTS LIST FOR CX-B GROUP P.1/1

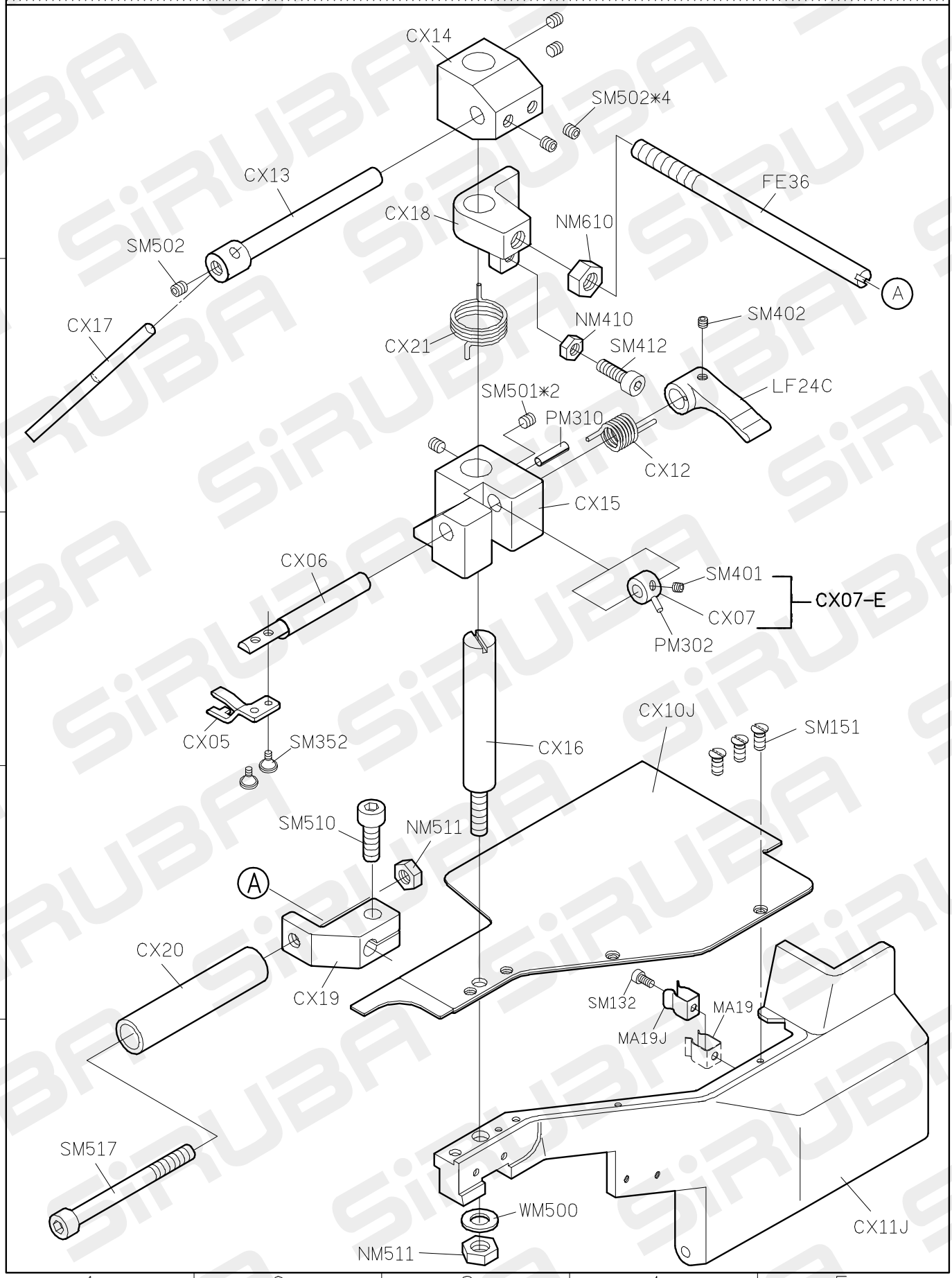

FOR C007J/C007JD/C858J/C858JD

10/07/01

C007JD PARTS LIST FOR CX- J GROUP

MODEL	薄布	超薄布
PARTS NO	CX108	CX109

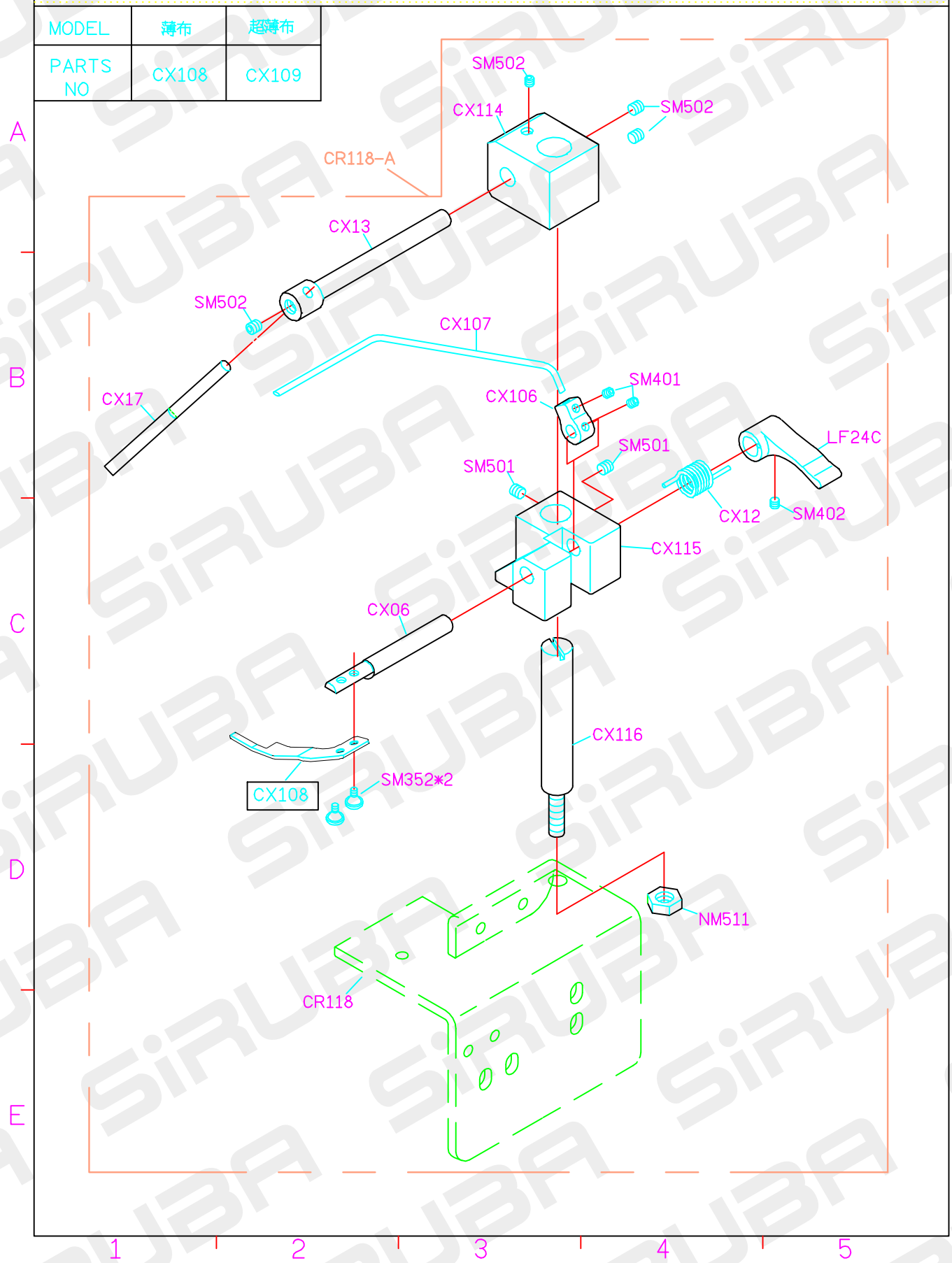

C007JD PARTS LIST FOR CY-H(CHP-H) GROUP P.1/4

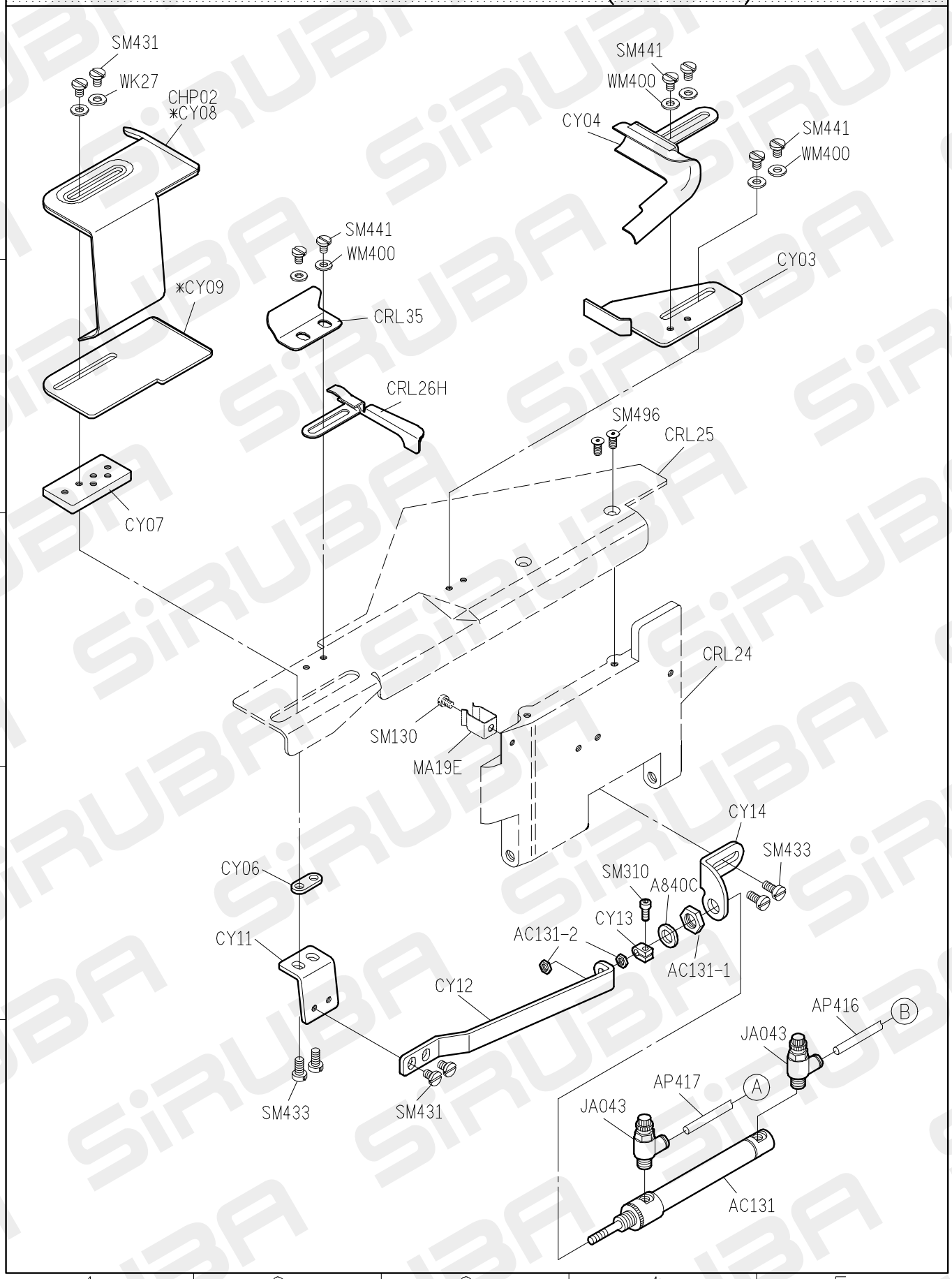

FOR C007J/C007JD/C858J/C858JD
*USR FOR CY-H

10/07/01

C007JD PARTS LIST FOR CY (CHP) GROUP P.2/4

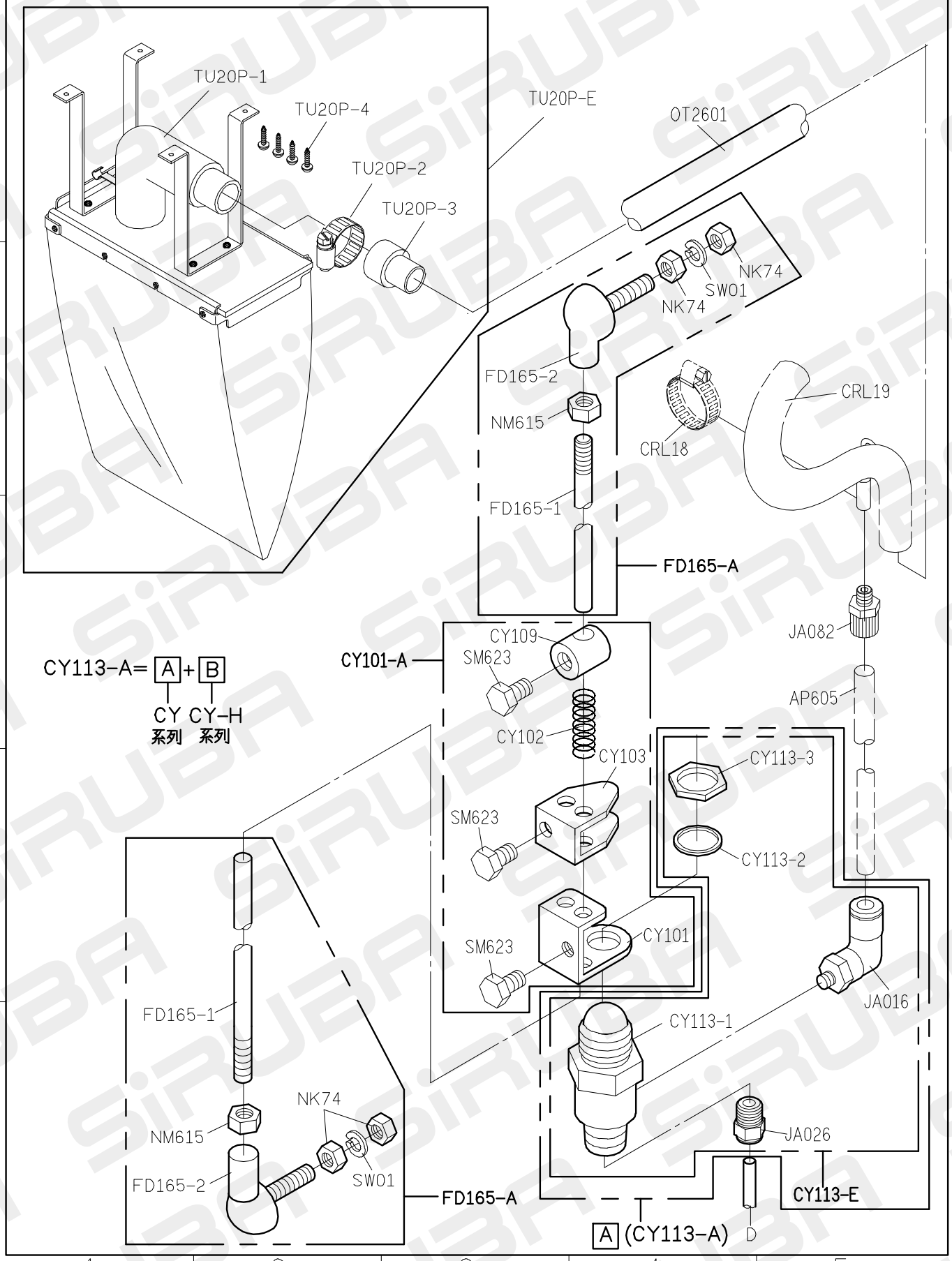

C007JD PARTS LIST FOR CY (CHP) GROUP P.3/4

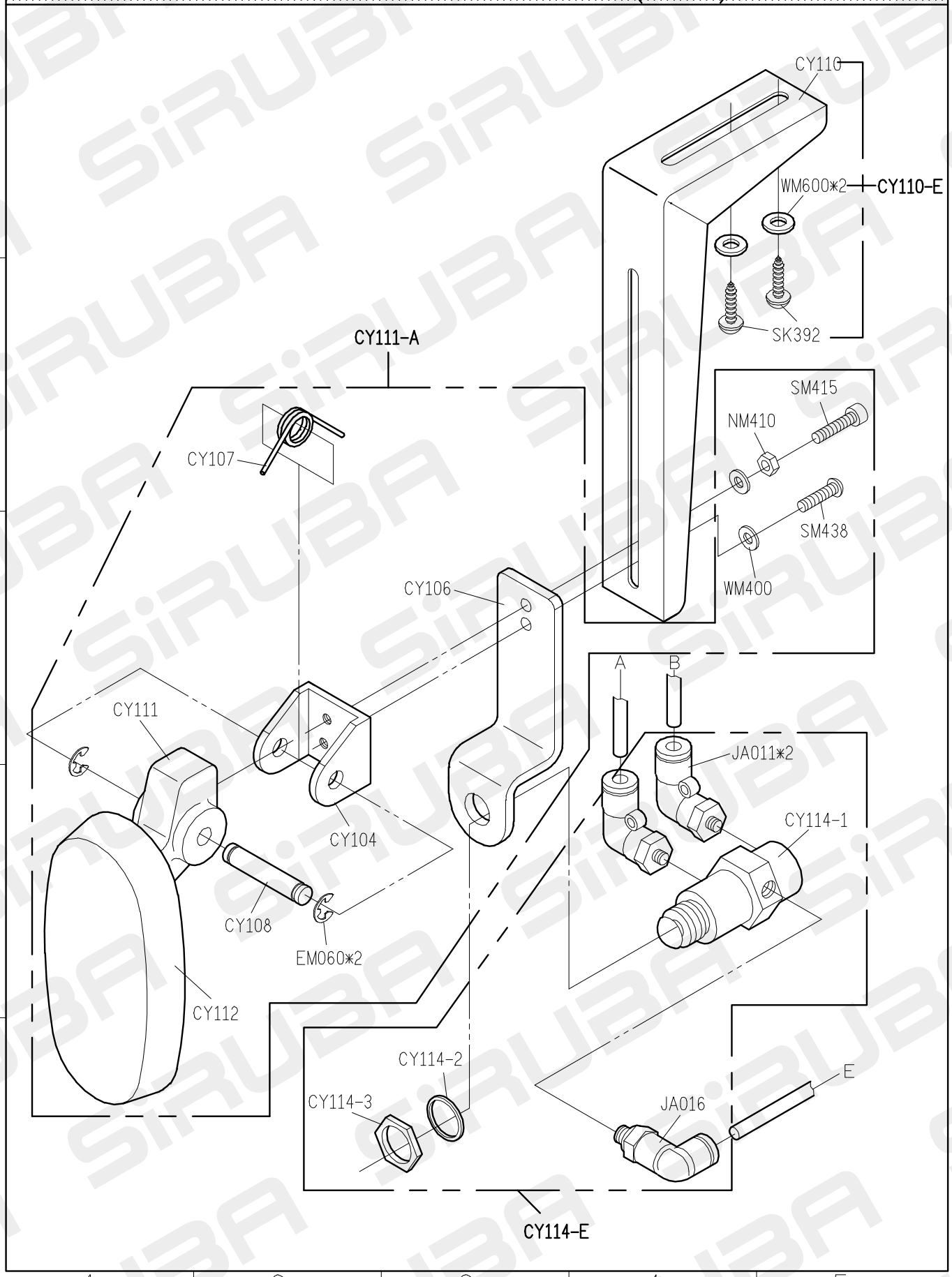

C007JD PARTS LIST FOR CY-H(CHP-H) GROUP P.4/4

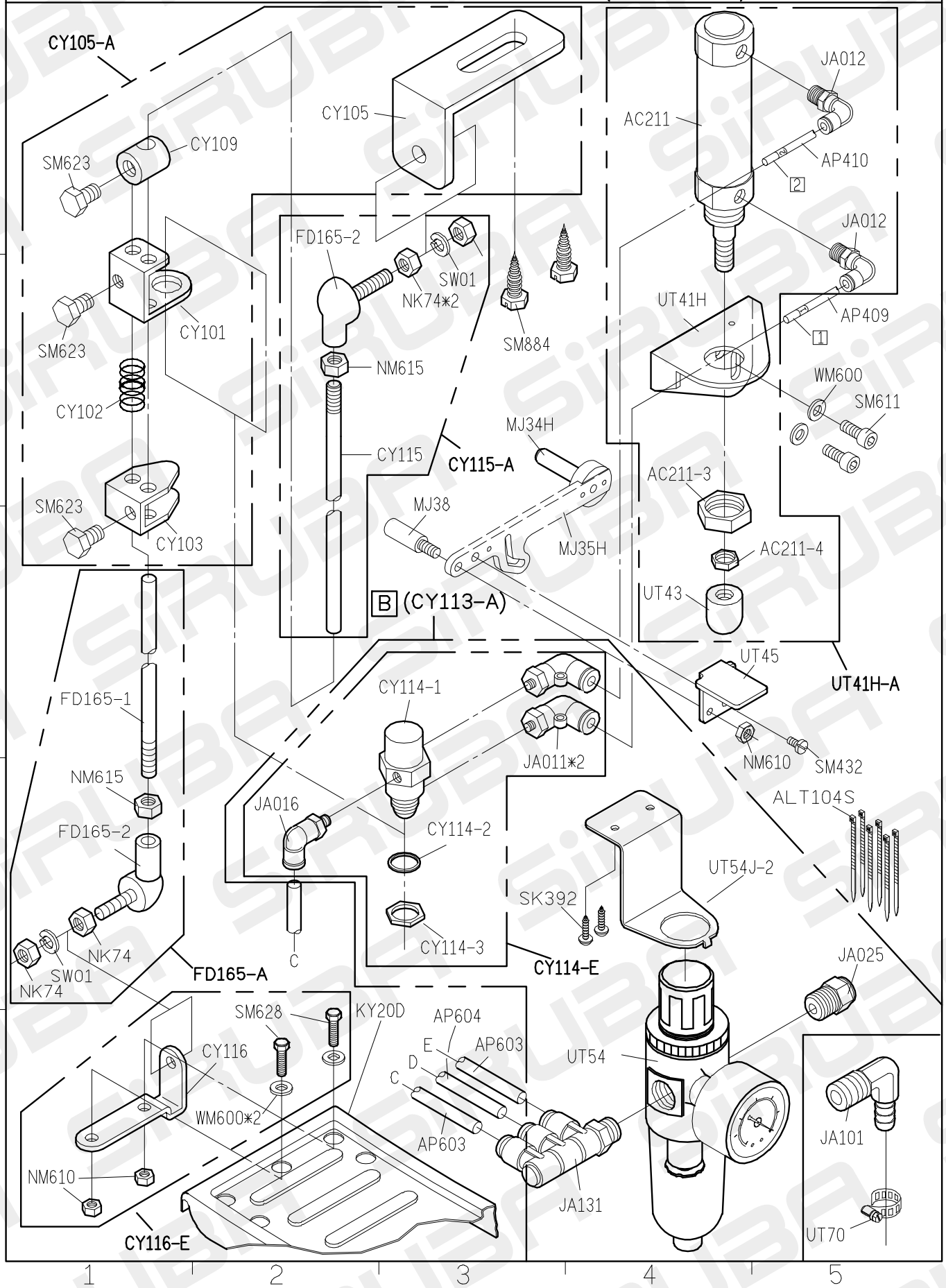

FOR C007J/C007JD/C858J/C858JD

10/07/01

C007JD PARTS LIST FOR CZ−J GROUP P.1/3

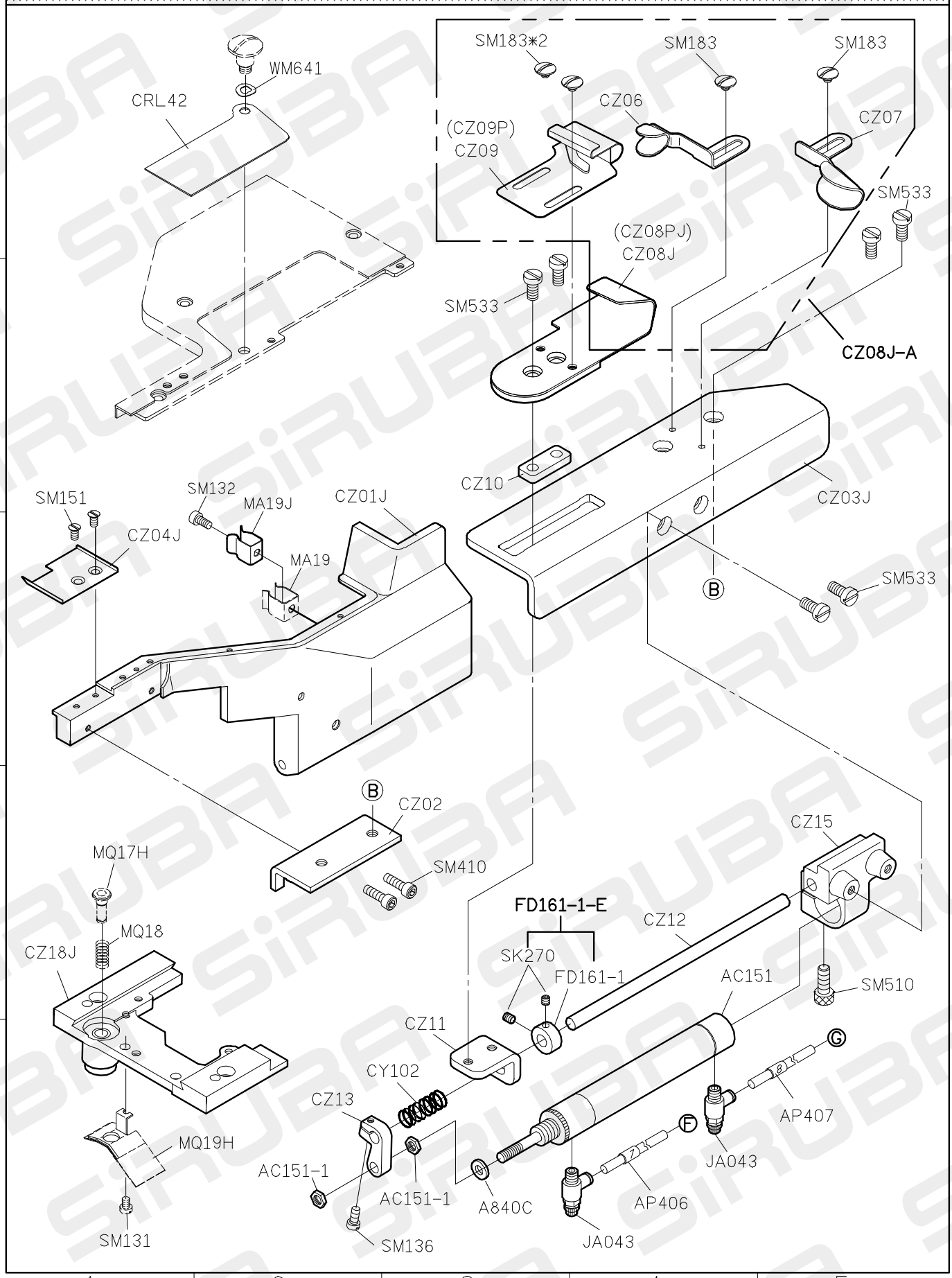

FOR C007J/C007JD/C858J/C858JD

10/07/01

C007JD PARTS LIST FOR CZ−J GROUP P.2/3

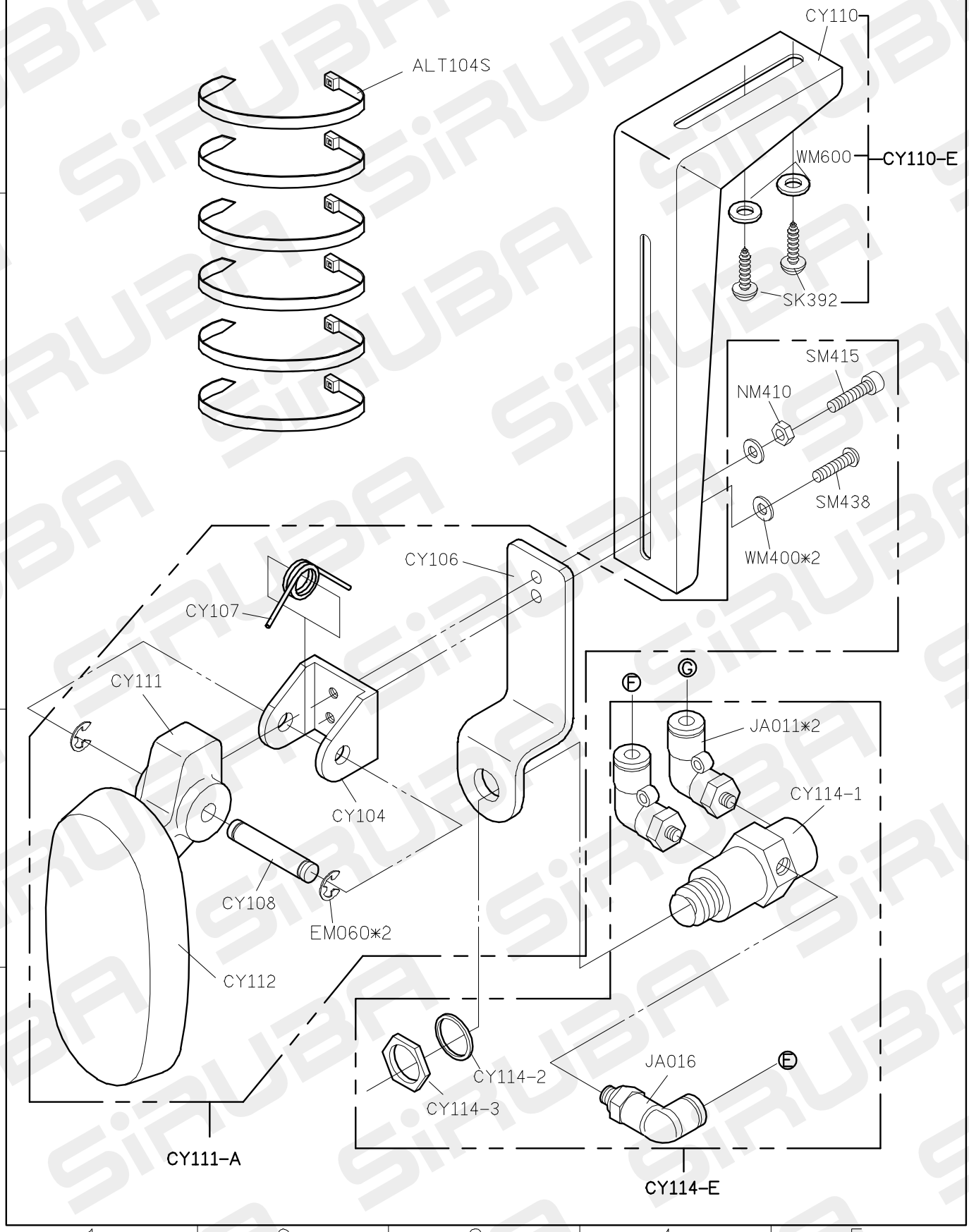

FOR C007J/C007JD/C858J/C858JD

10/07/01

C007JD PARTS LIST FOR CZ−J GROUP P.3/3

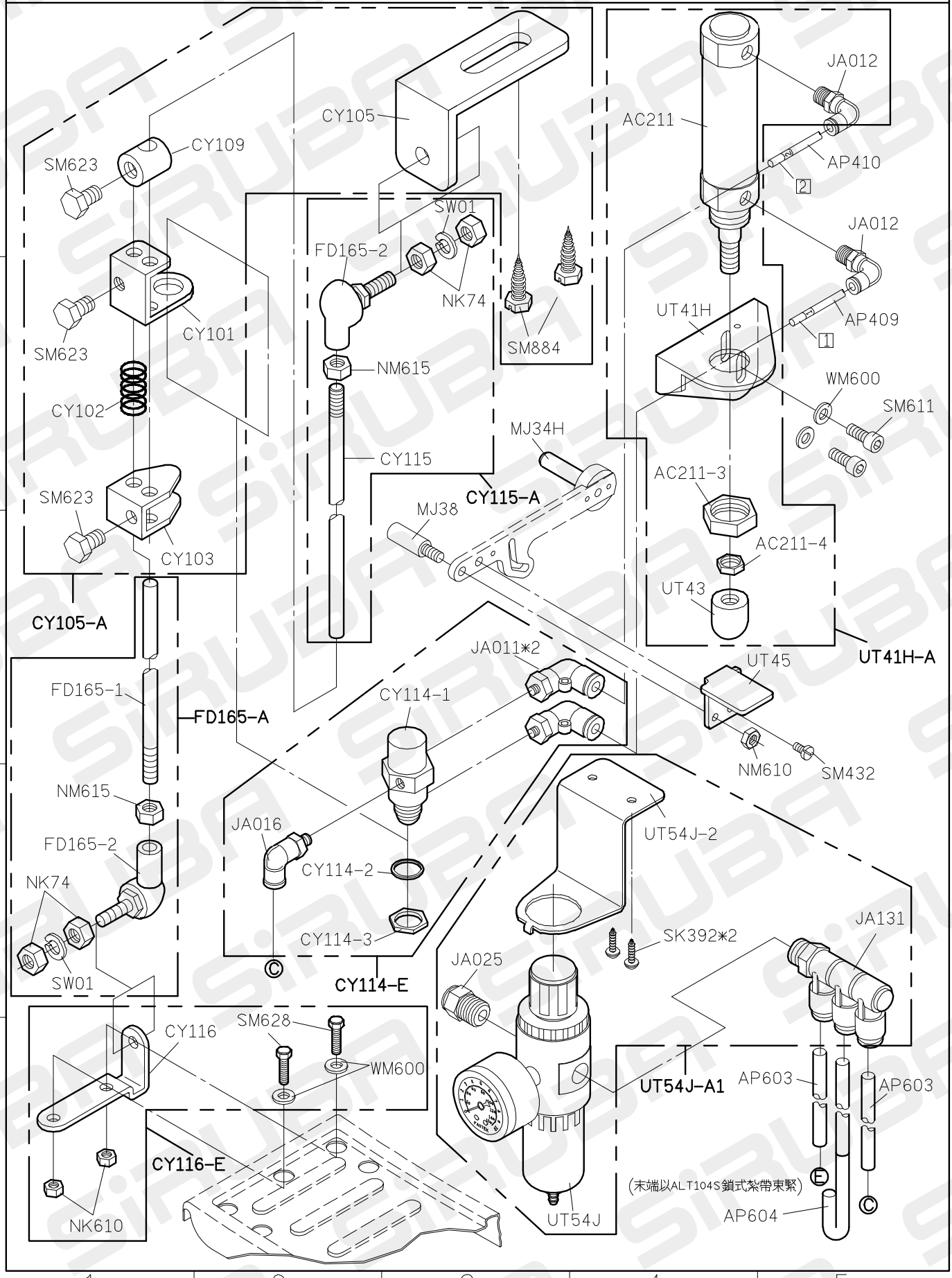

FOR C007J/C007JD/C858J/C858JD

10/07/01

C007JD PARTS LIST FOR CZP－J GROUP P.1/2

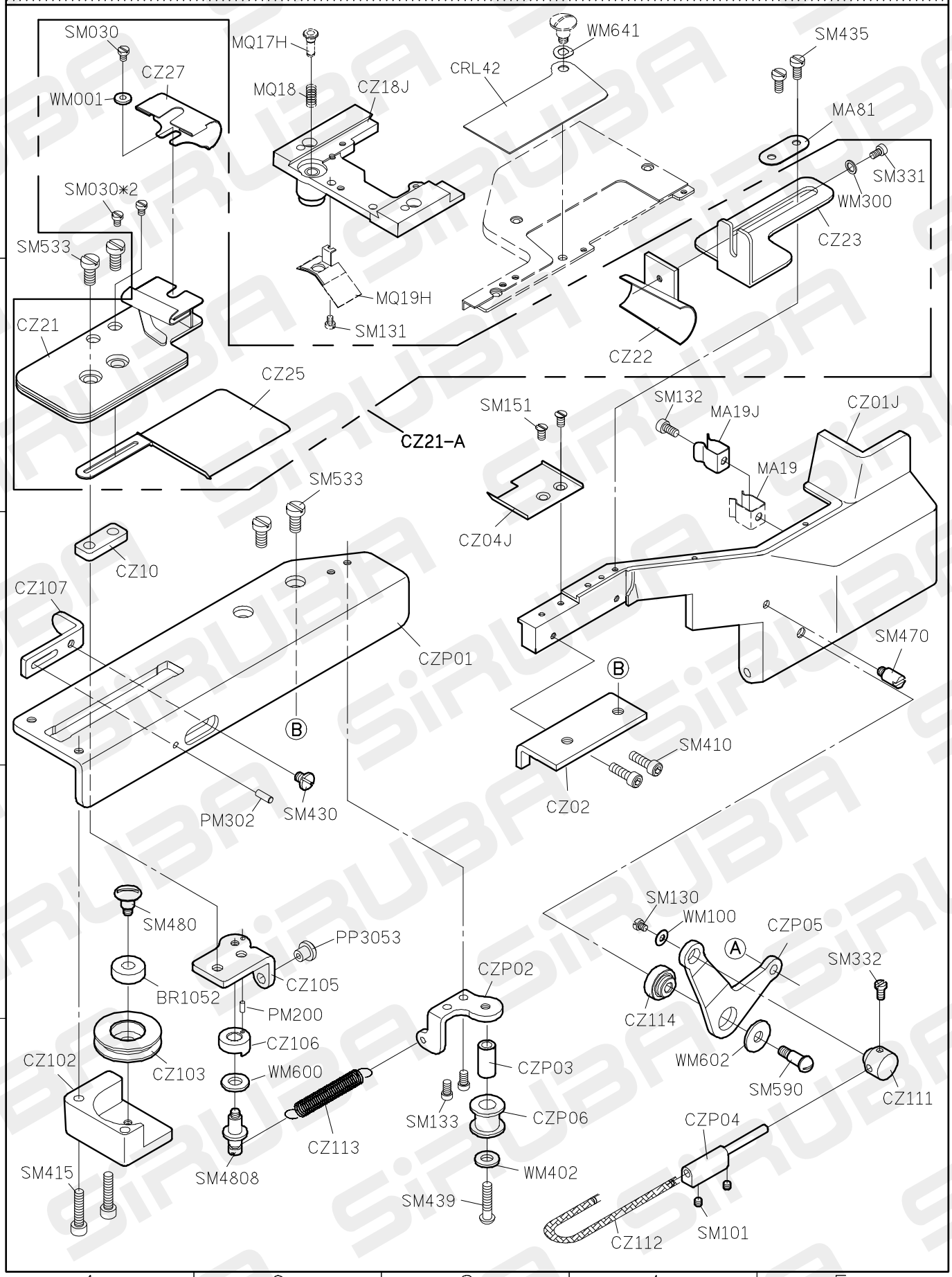

FOR C007J/C007JD/C858J/C858JD

10/07/01

C007JD PARTS LIST FOR CZP−J GROUP P.2/2

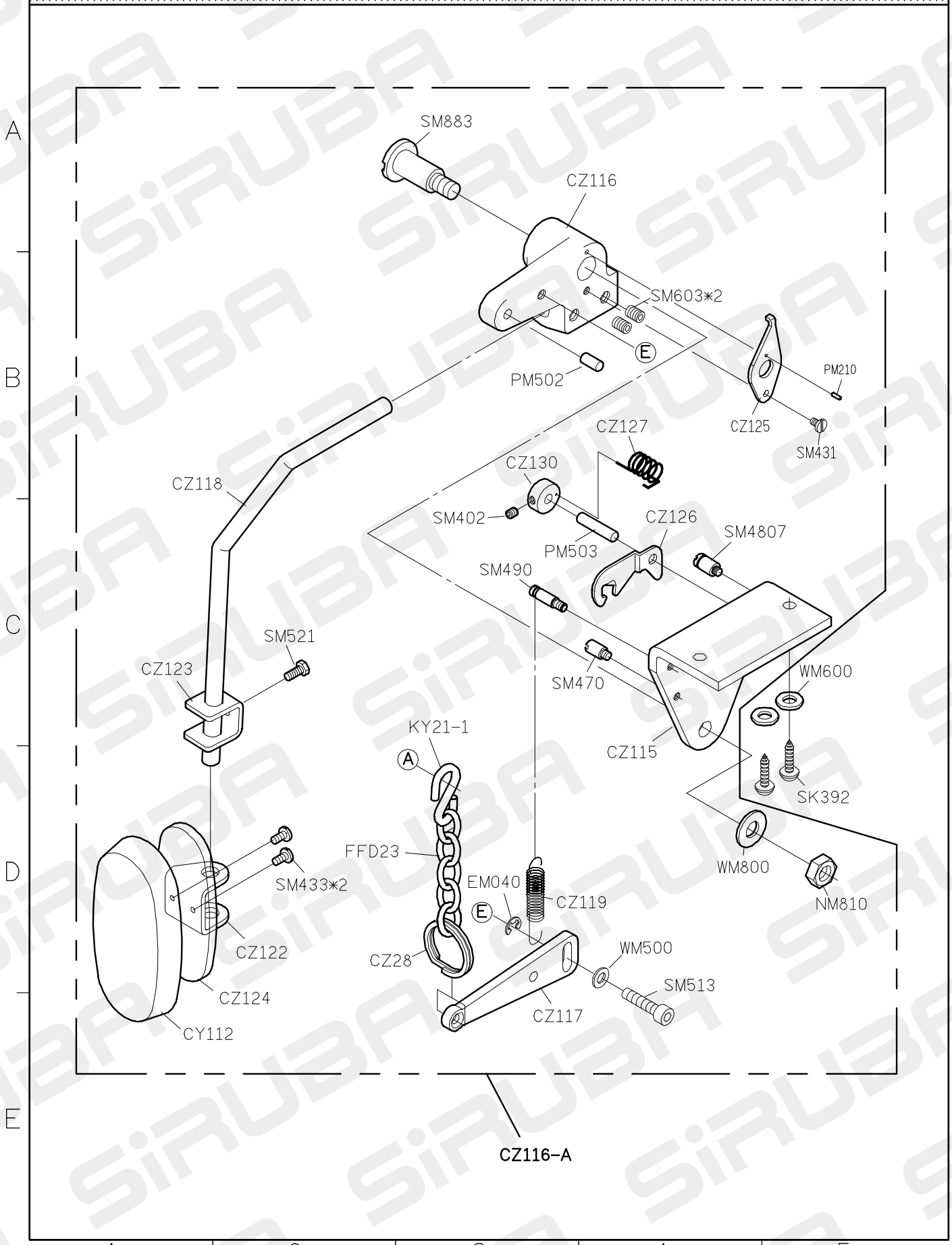

C007JD PARTS LIST FOR WP GROUP P.1/2

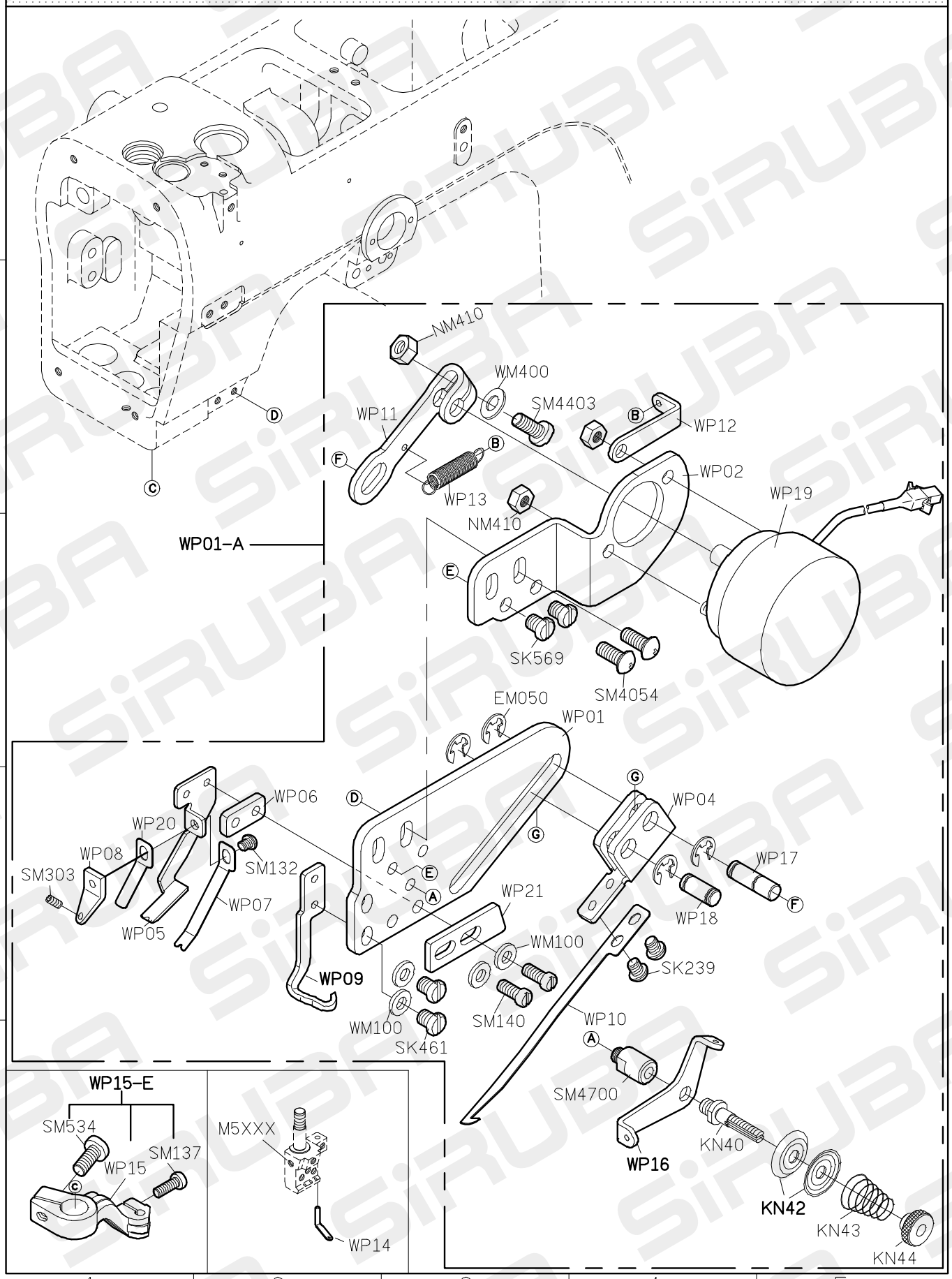

FOR F007J/F007JD/C007J/C007JD/S007K/S007KD
FOR F858J/F858JD/C858J/C858JD

10/07/01

C007JD PARTS LIST FOR WP GROUP P.2/2

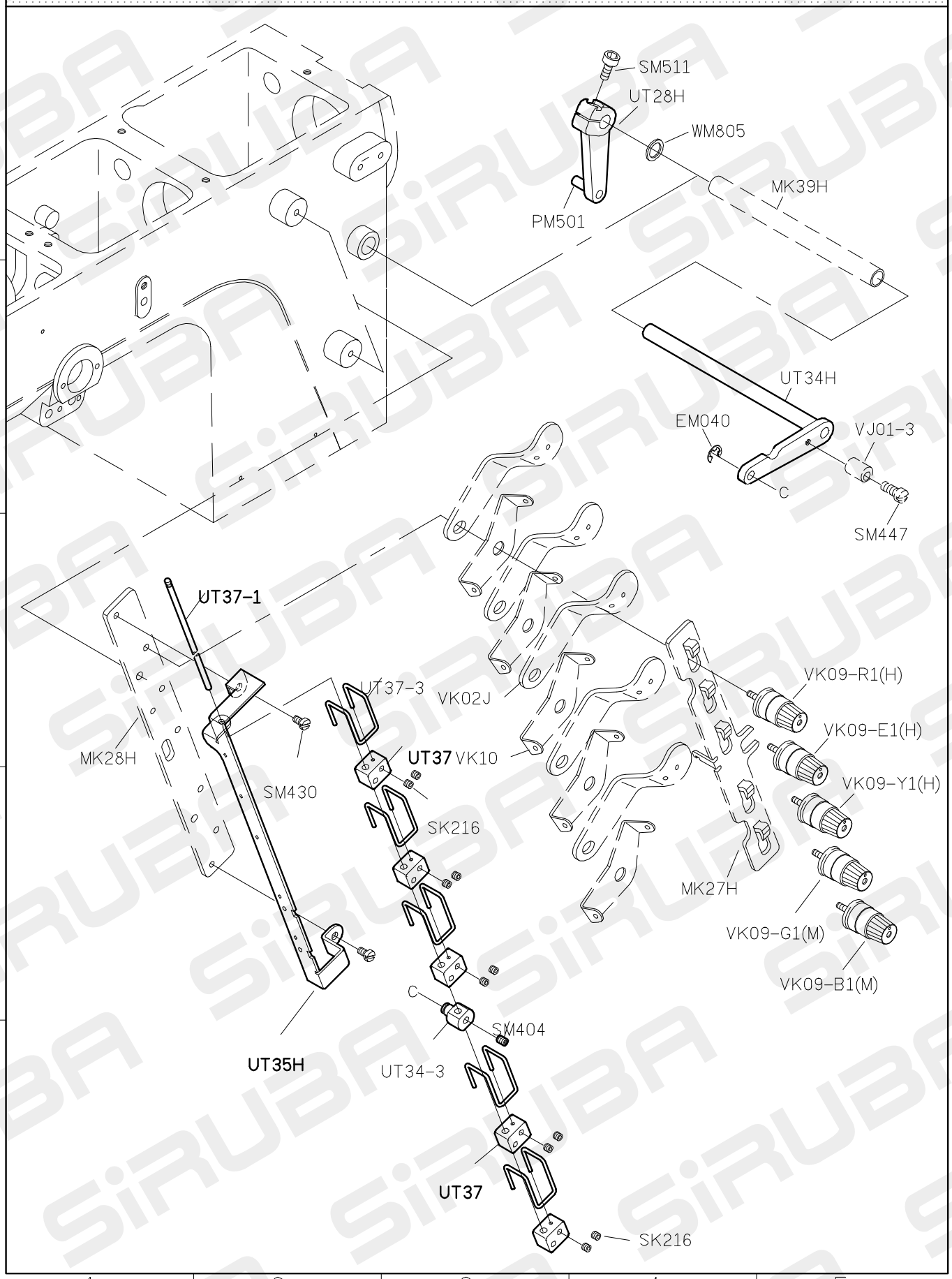

FOR F007J/F007JD/C007J/C007JD/S007K/S007KD
FOR F858J/F858JD/C858J/C858JD

10/07/01