F007JD PARTS LIST FOR UTG(UTH) GROUP P.1/12

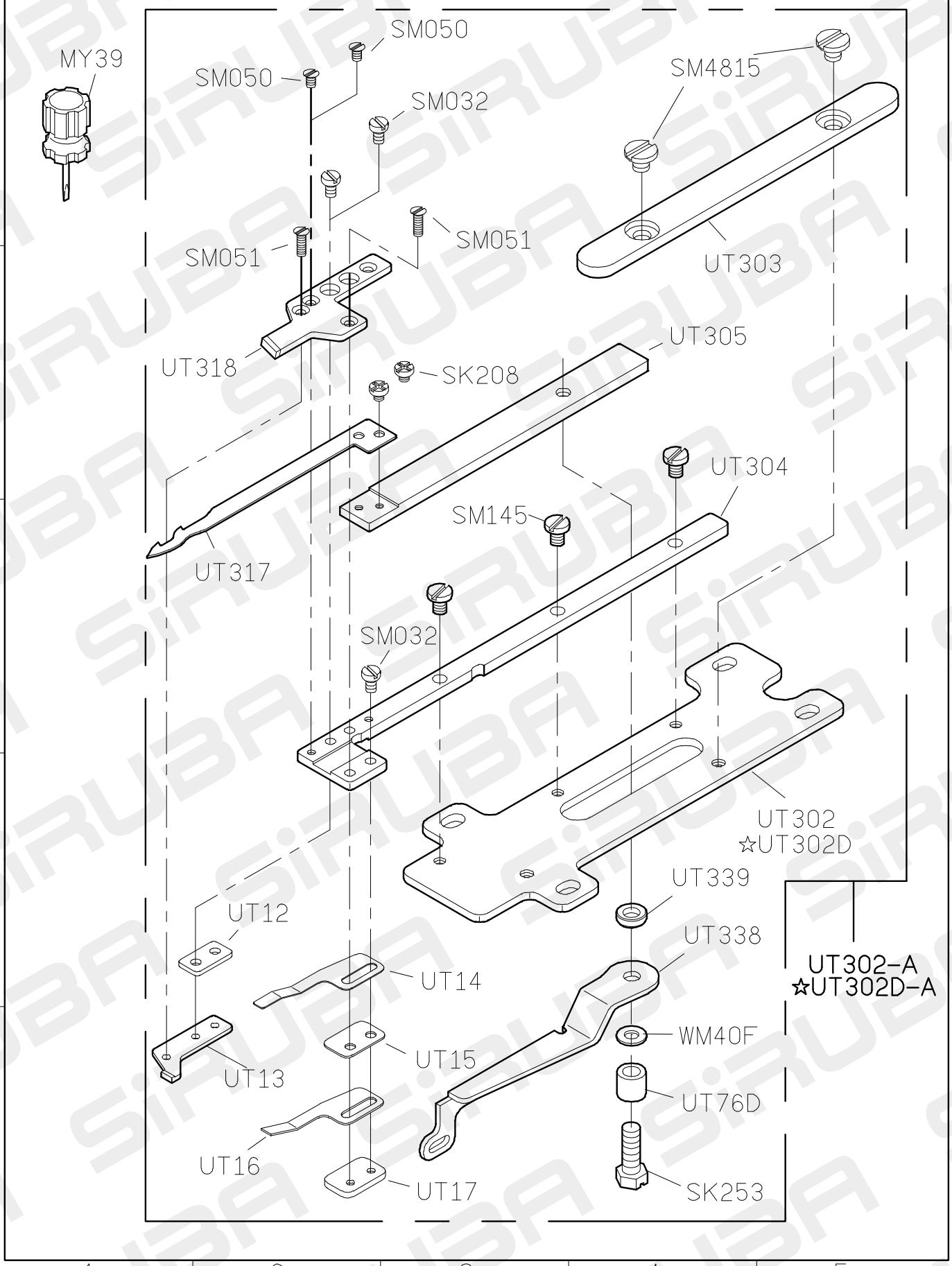

FOR F007J/F007JD/ F858J/F858JD

☆USE FOR F007J/F858J-FQ/F007JD/F858JD-FQ

10/07/01

F007JD PARTS LIST FOR UTG(UTH) GROUP

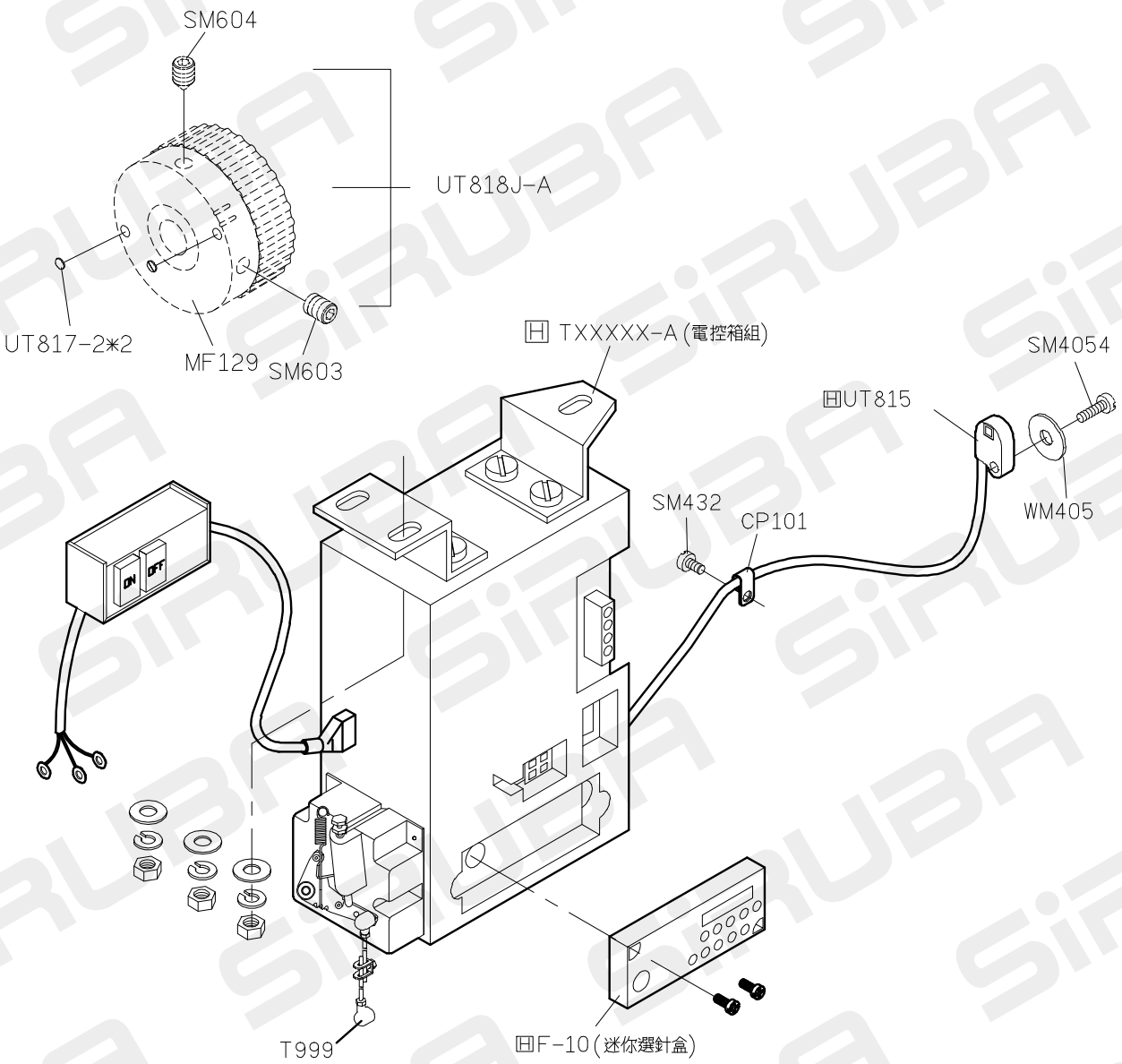

FOR F007JD/C007JD/F858JD/C858JD　H FOR H牌馬達 (HVP-20)

10/07/01

F007JD PARTS LIST FOR UTG(UTH) GROUP

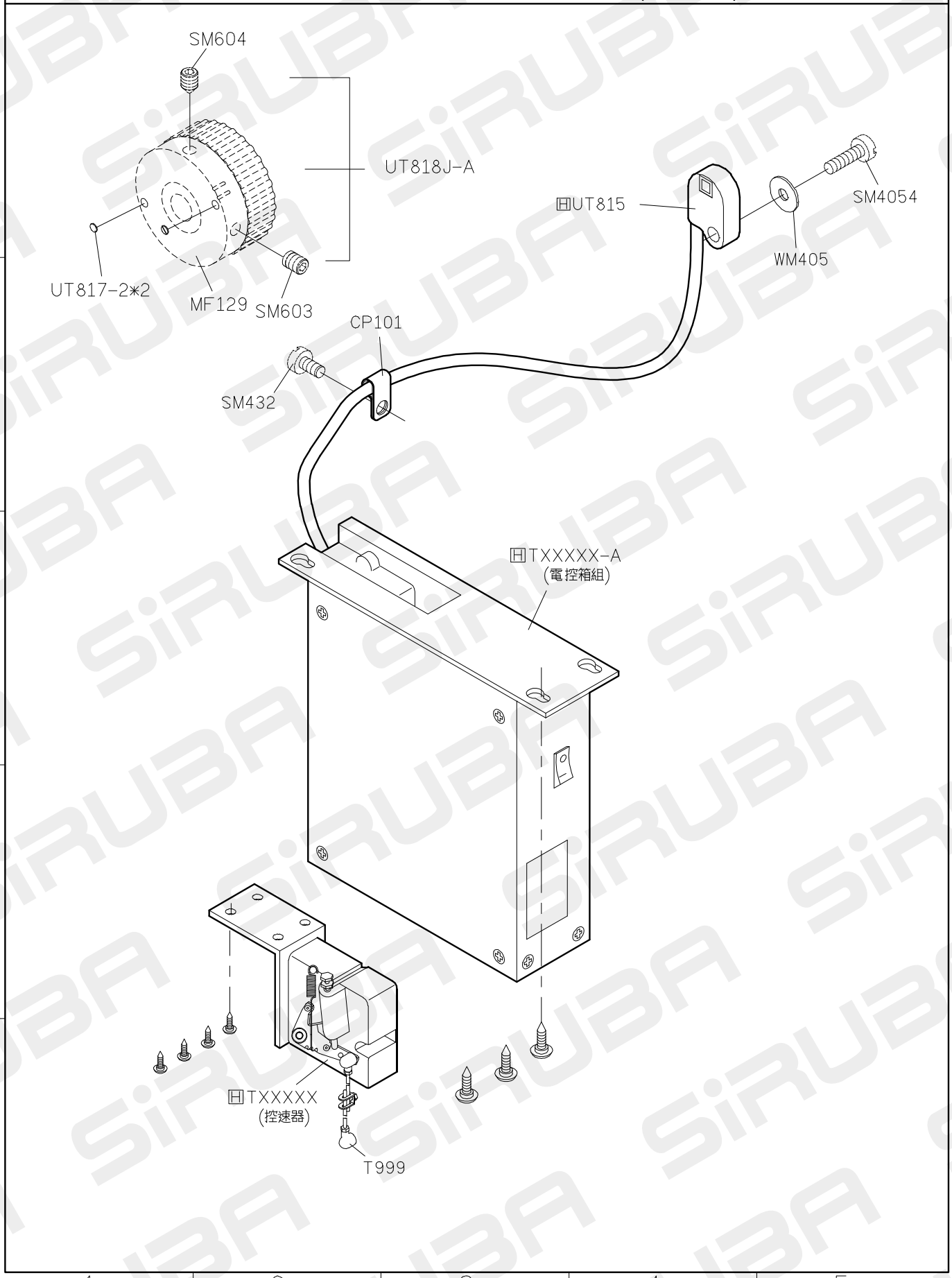

FOR F007JD/C007JD/F858JD/C858JD

田 FOR H牌馬達(HVP-70)

10/07/01

F007JD PARTS LIST FOR UTG(UTH) GROUP

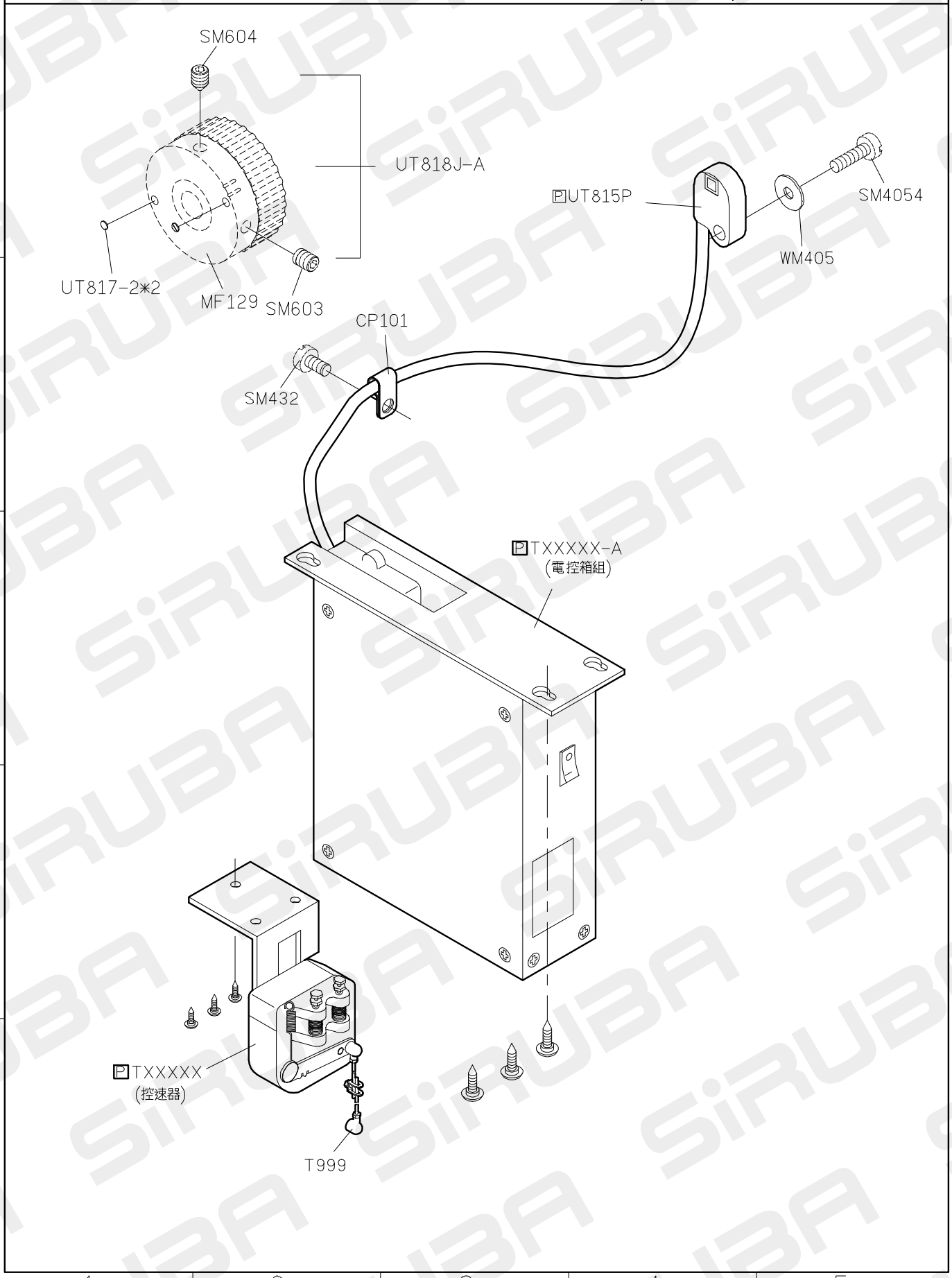

FOR F007JD/C007JD/F858JD/C858JD

P FOR P牌馬達

10/07/01

F007JD PARTS LIST FOR UTG(UTH) GROUP P.2/12

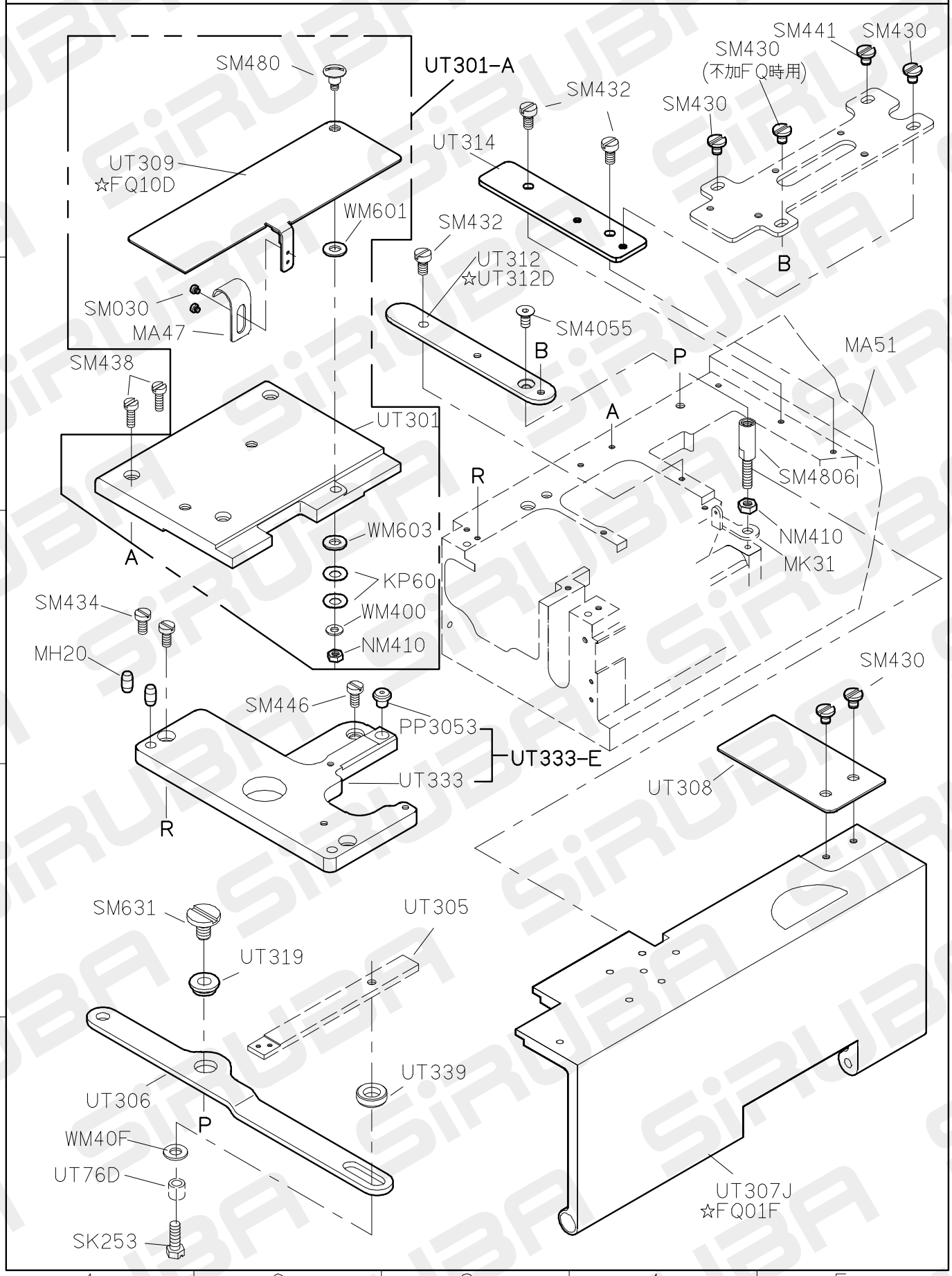

FOR F007J/F007JD/F858J/F858JD

☆USE FOR F007J/F858J-FQ/F007JD/F858JD-FQ

10/07/01

F007JD PARTS LIST FOR UTG(UTH) GROUP P.3/12

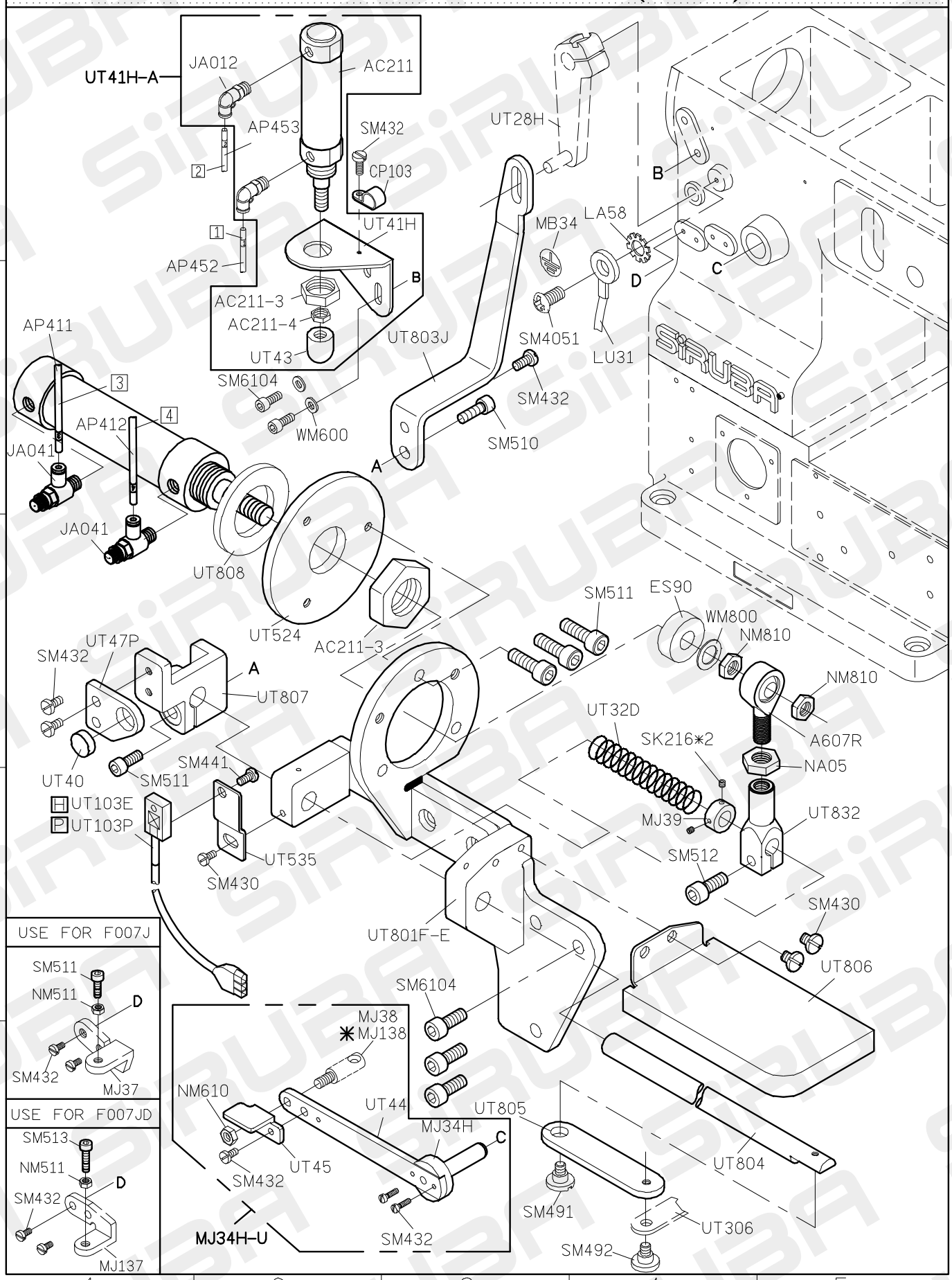

FOR F007J/F007JD/F858J/F858JD
"*" USE FOR F007JD/F858JD

H FOR H牌馬達
P FOR P牌馬達

10/07/01

F007JD PARTS LIST FOR UTG(UTH) GROUP P.4/12

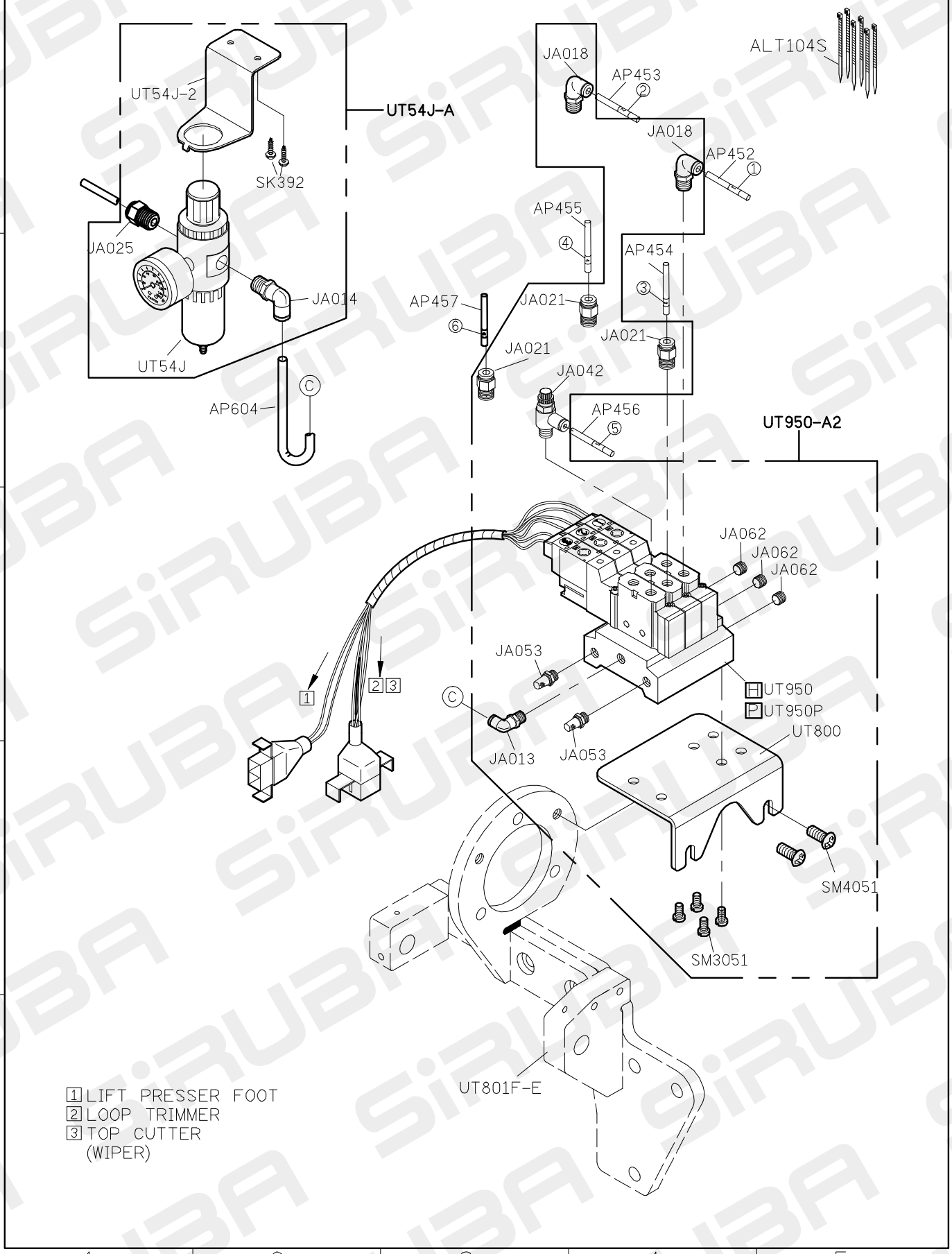

FOR F007J/F007JD/F858J/F858JD

H FOR H牌馬達
P FOR P牌馬達

10/07/01

F007JD PARTS LIST FOR UTG(UTH) GROUP P.5/12

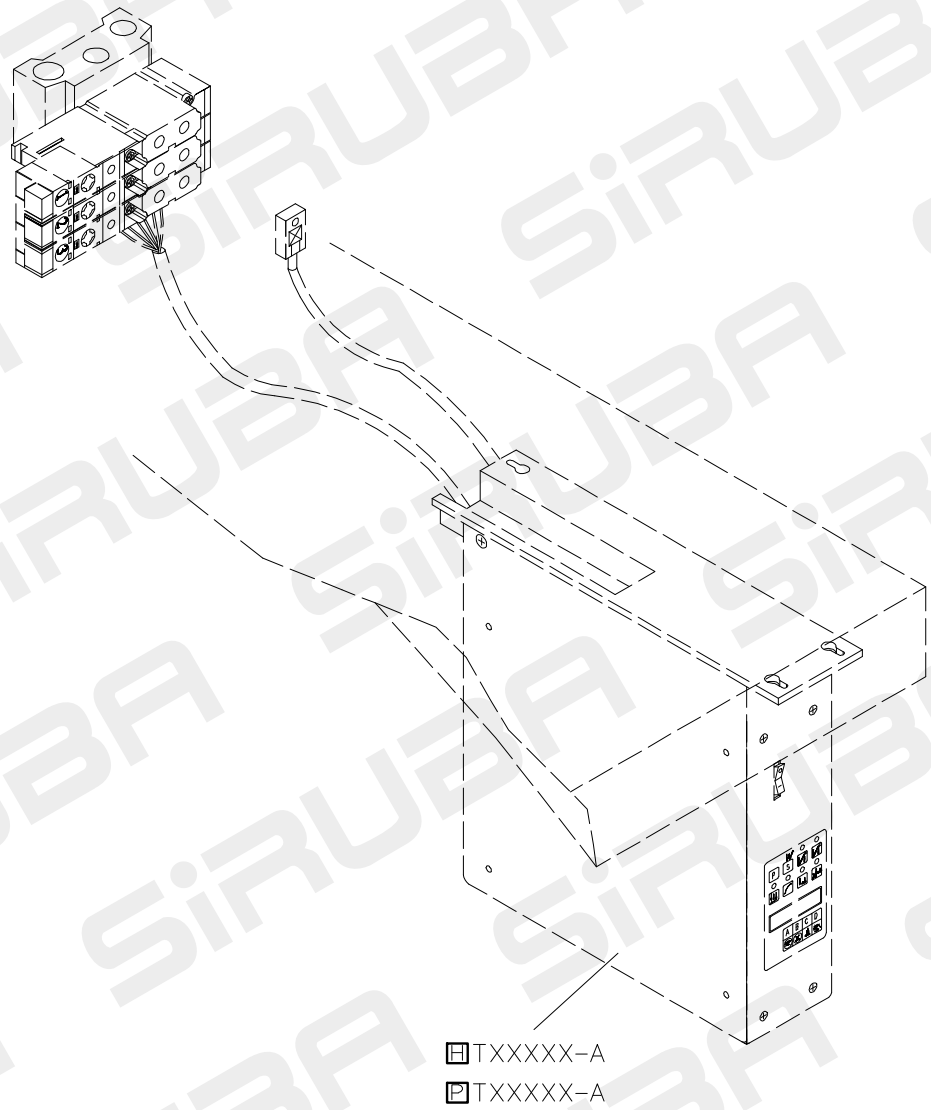

FOR F007JD/F858JD

H FOR H牌馬達(HVP-70)
P FOR P牌馬達

10/07/01

F007JD PARTS LIST FOR UTG(UTH) GROUP P.6/12

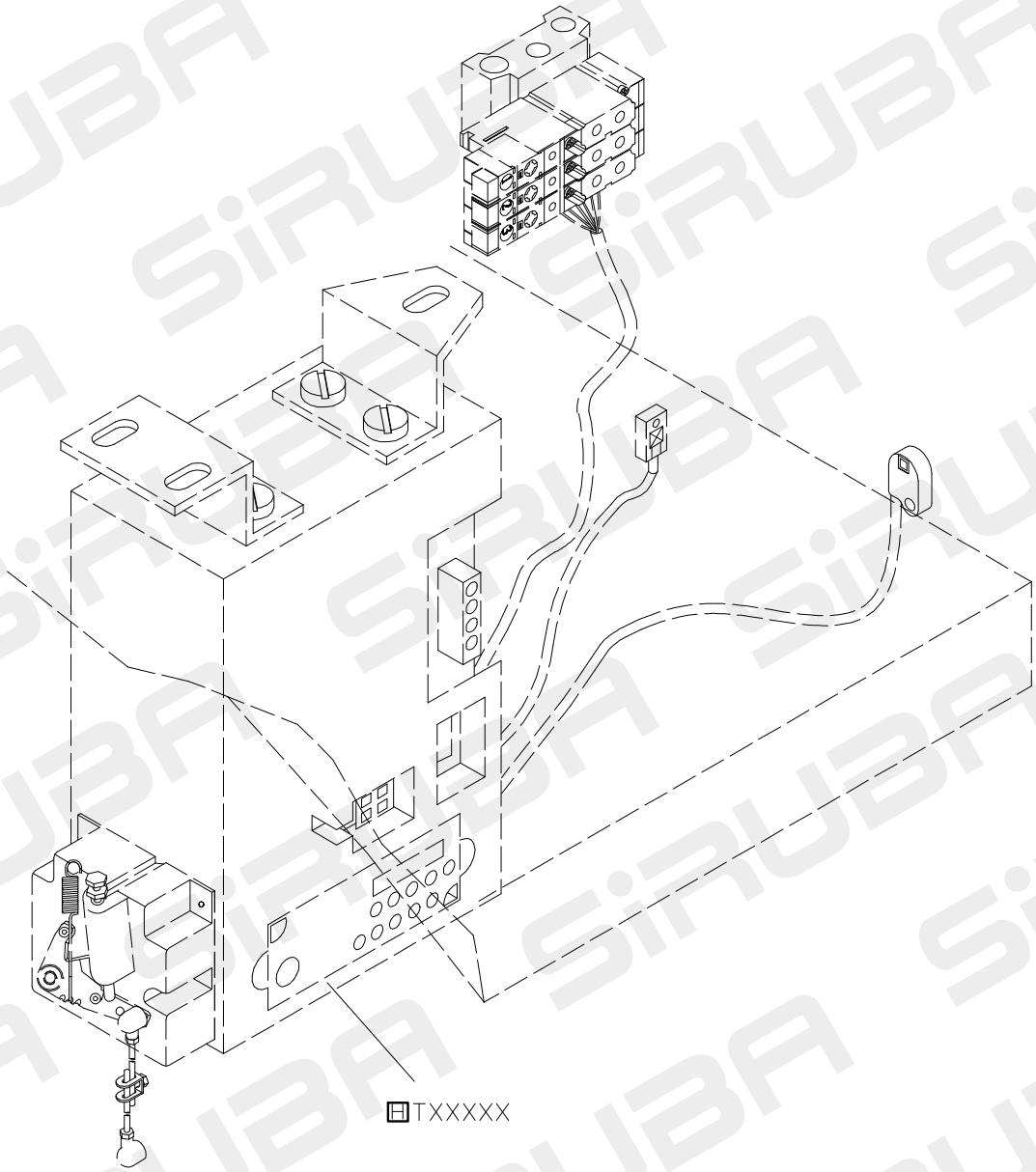

FOR F007JD/F858JD

H FOR H牌馬達(HVP-20)

10/07/01

F007JD PARTS LIST FOR UTG(UTH) GROUP P.7/12

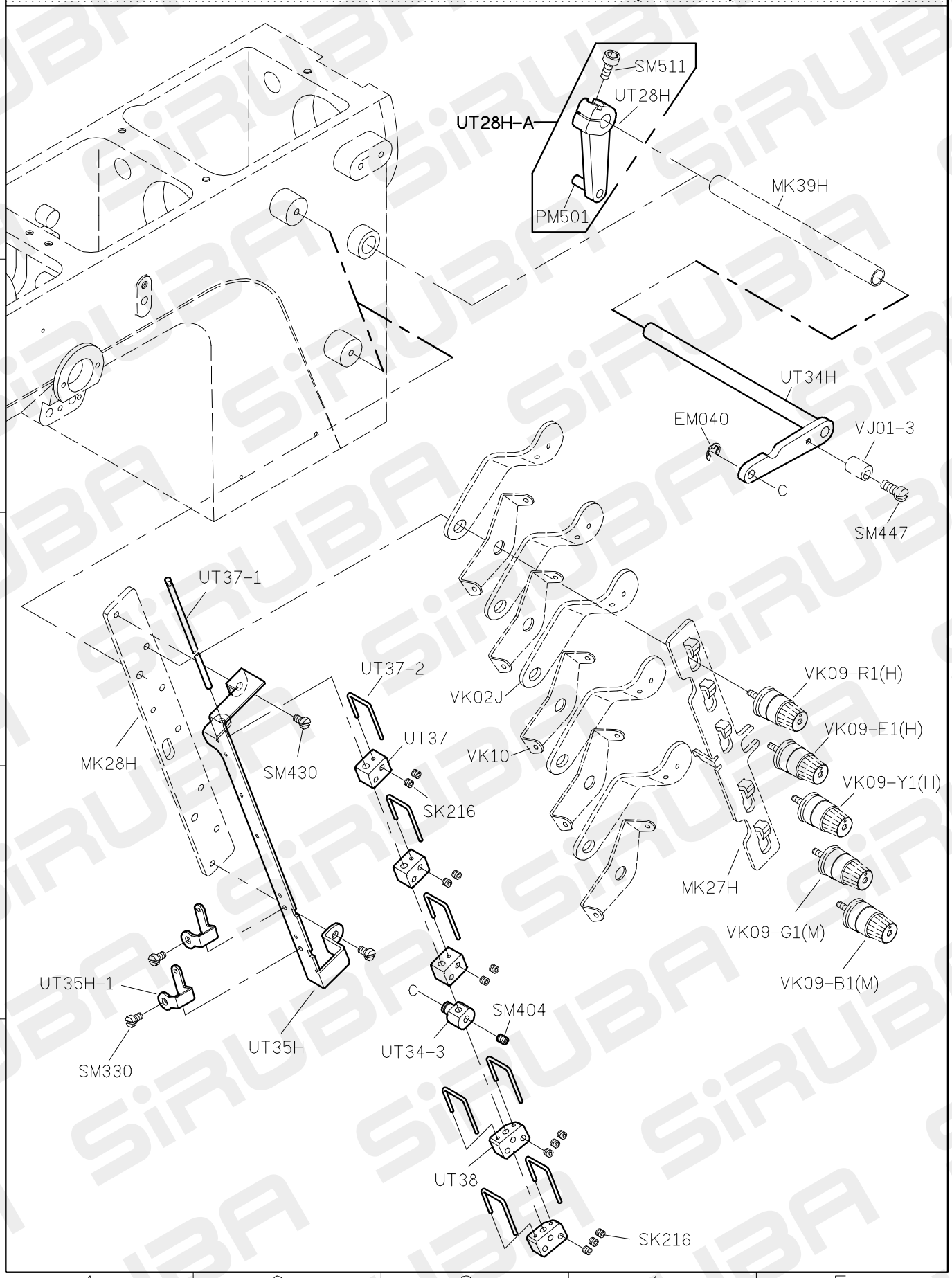

FOR LEFT SIDE

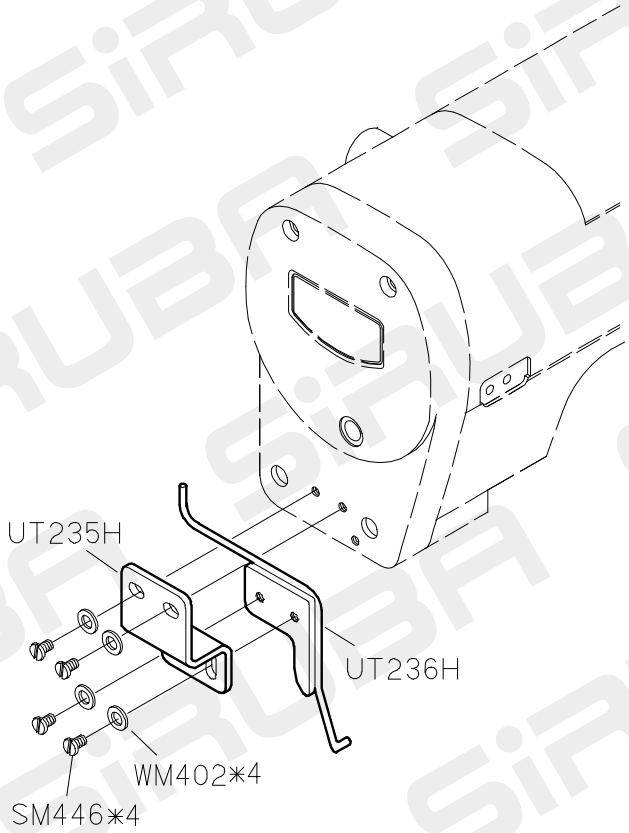

F007JD PARTS LIST FOR UTG-J GROUP

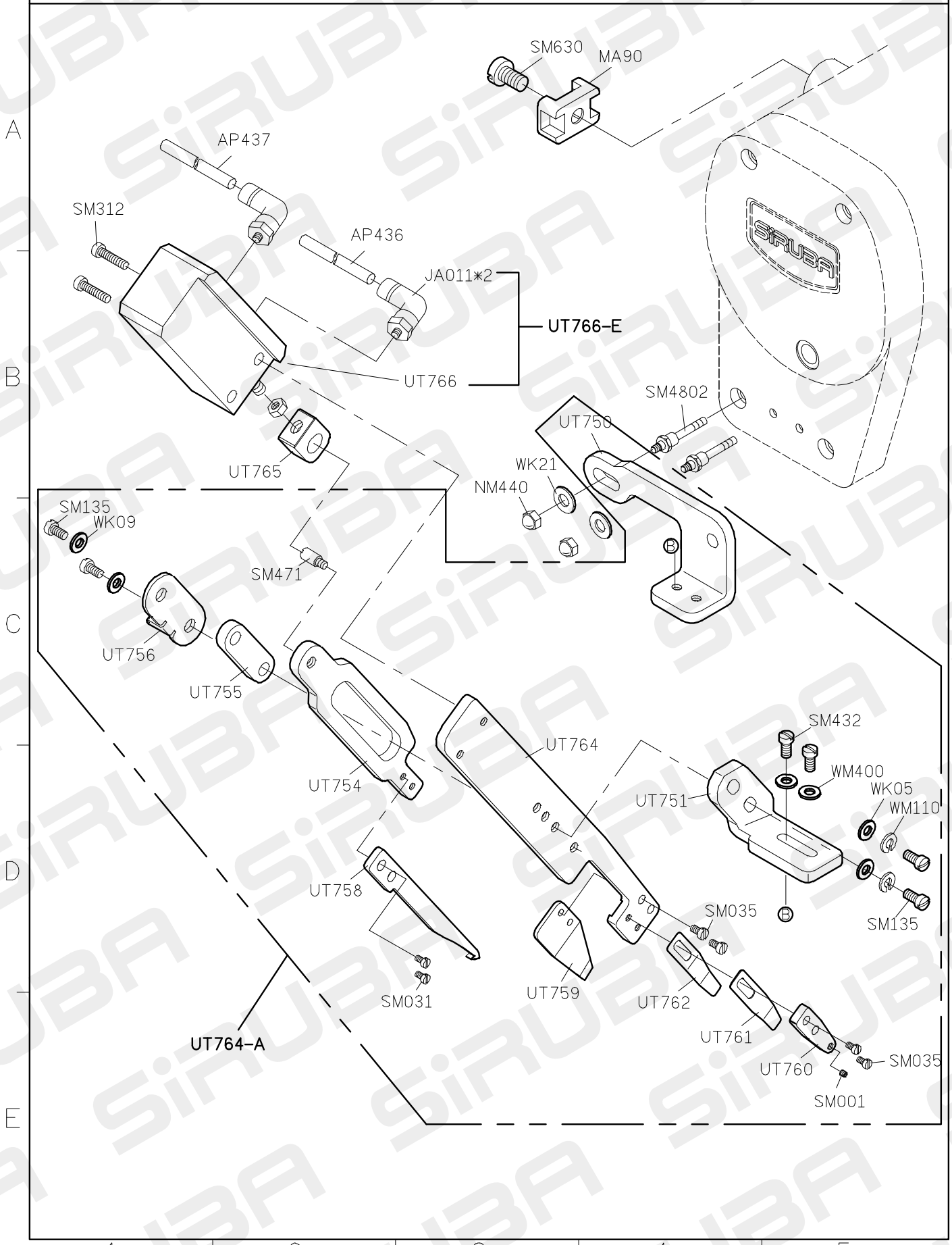

F007JD PARTS LIST FOR UTJ-J(UTK-J) GROUP P.1/12

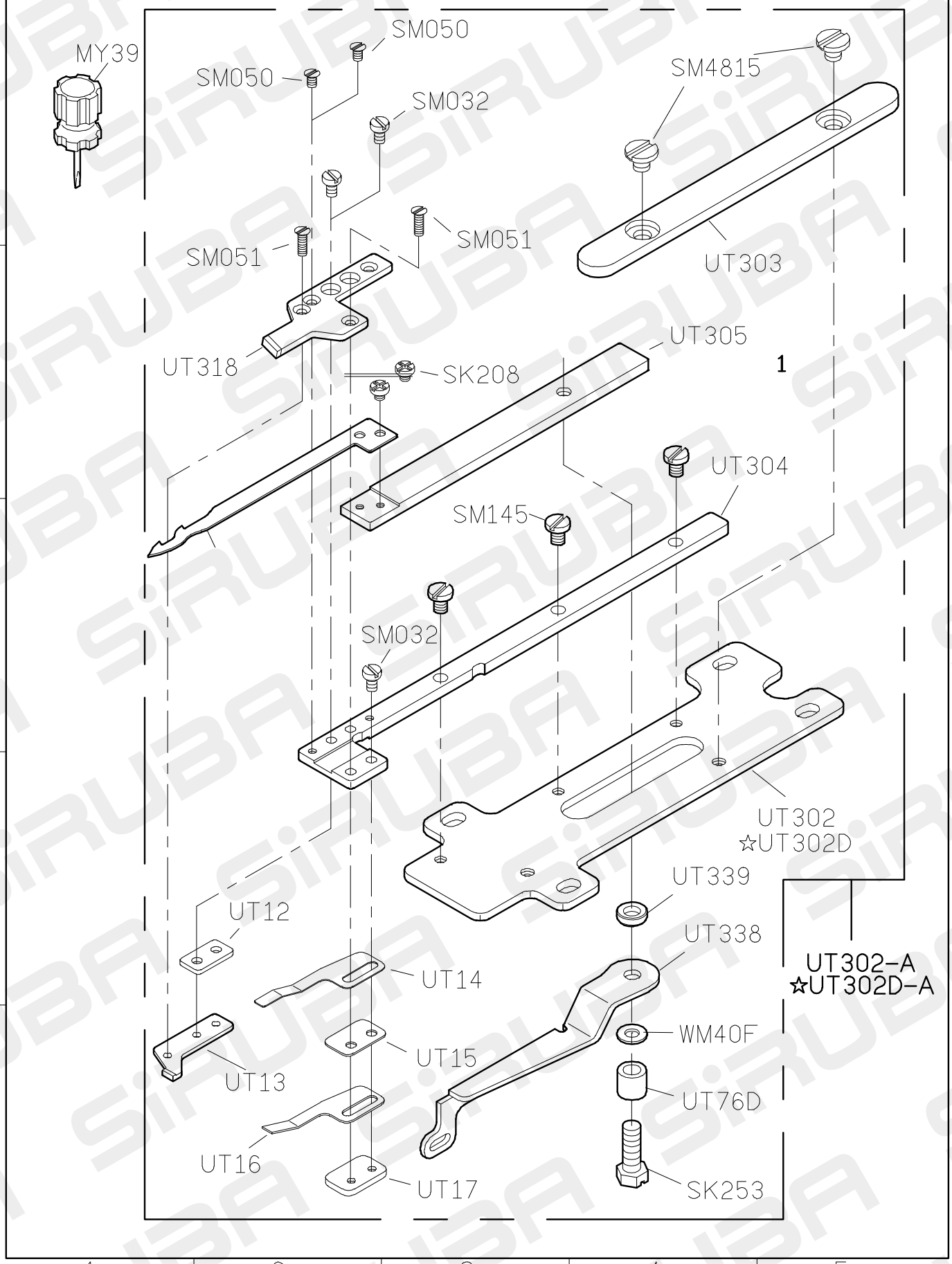

F007JD PARTS LIST FOR UTJ-J(UTK-J) GROUP P.10/12

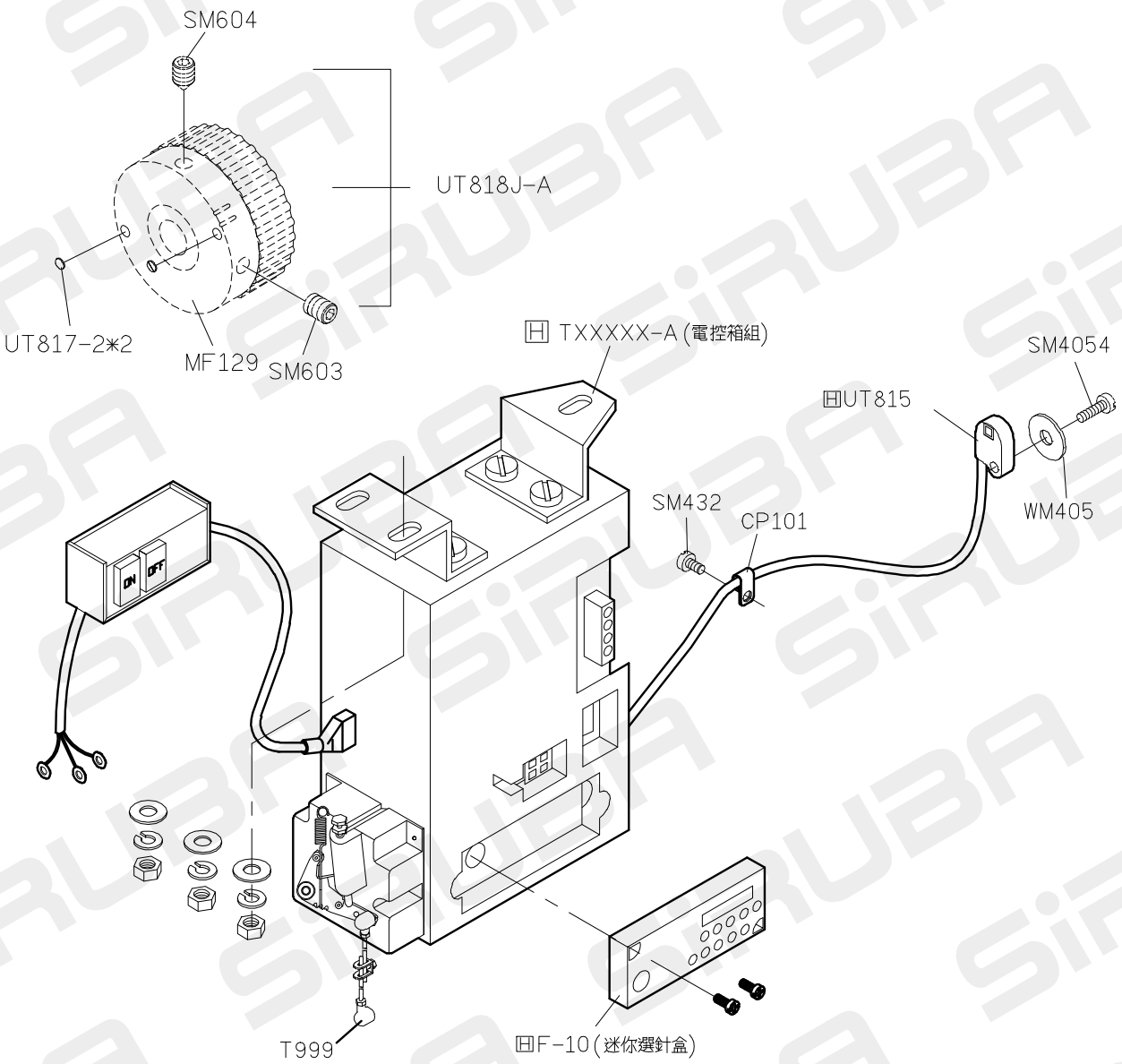

FOR F007JD/C007JD/F858JD/C858JD　H FOR H牌馬達 (HVP-20)

10/07/01

F007JD PARTS LIST FOR UTJ-J(UTK-J) GROUP P.11/12

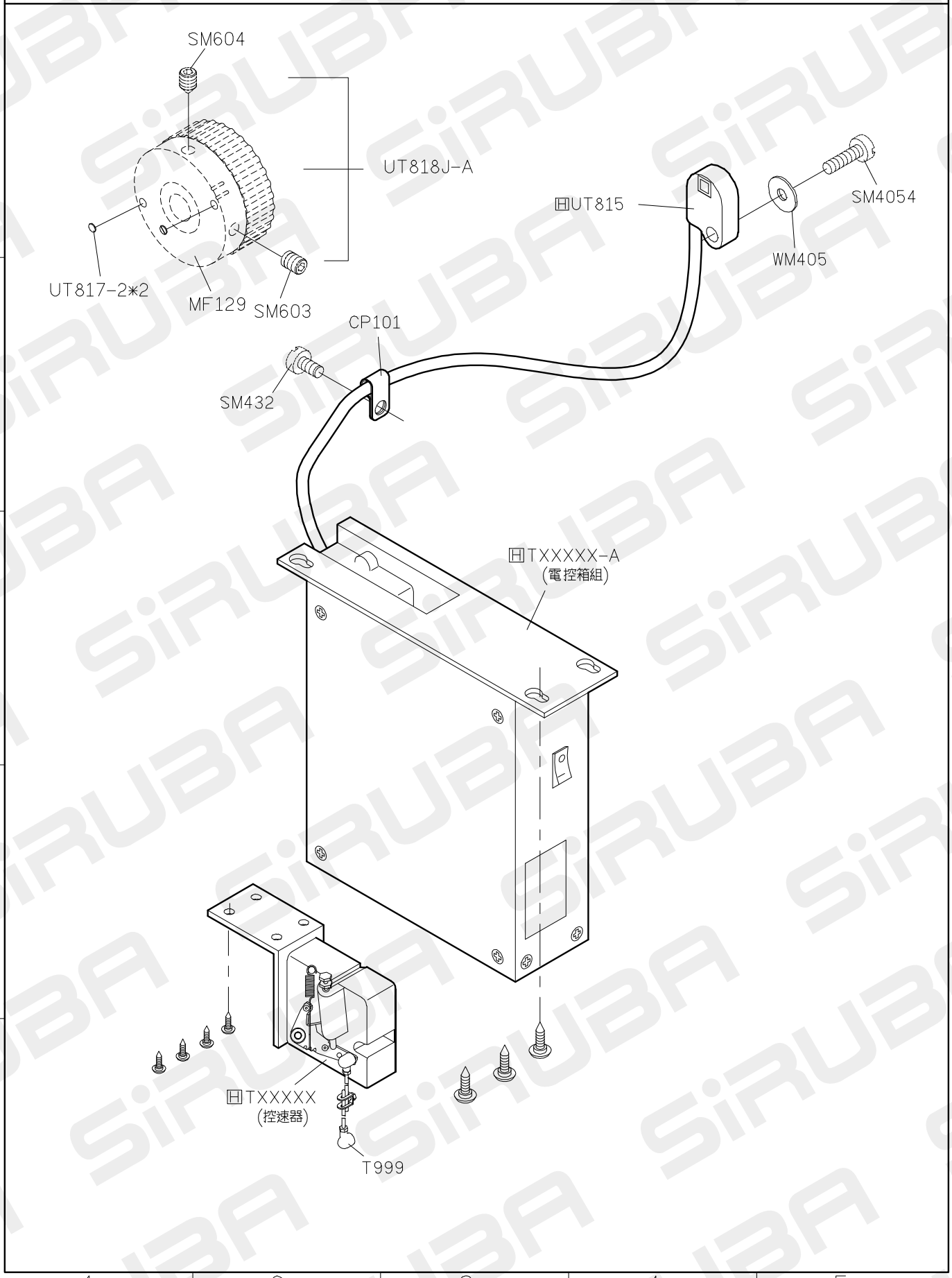

FOR F007JD/C007JD/F858JD/C858JD

田 FOR H牌馬達(HVP-70)

10/07/01

F007JD PARTS LIST FOR UTJ-J(UTK-J) GROUP P.12/12

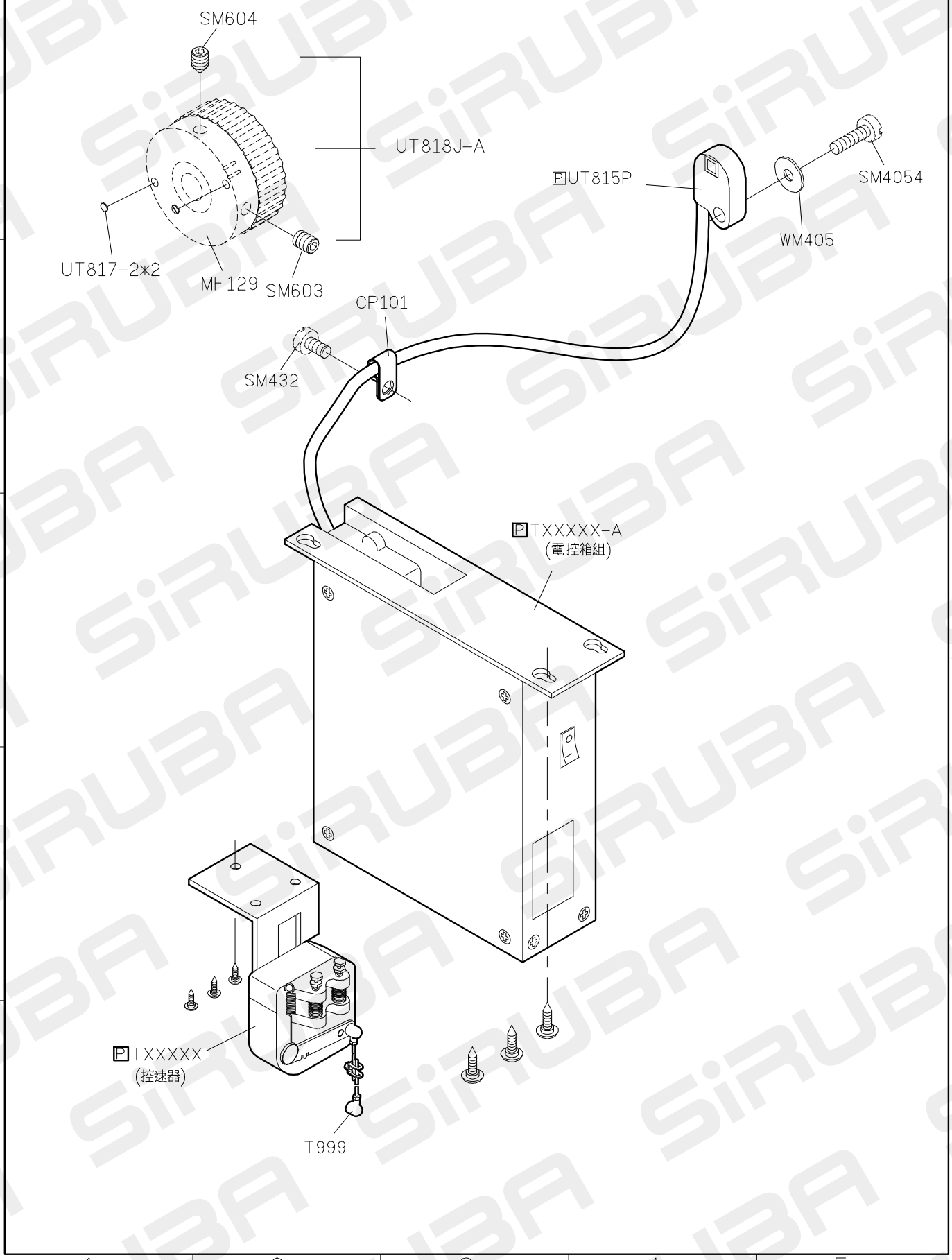

FOR F007JD/C007JD/F858JD/C858JD

P FOR P牌馬達

10/07/01

F007JD PARTS LIST FOR UTJ-J(UTK-J) GROUP P.2/12

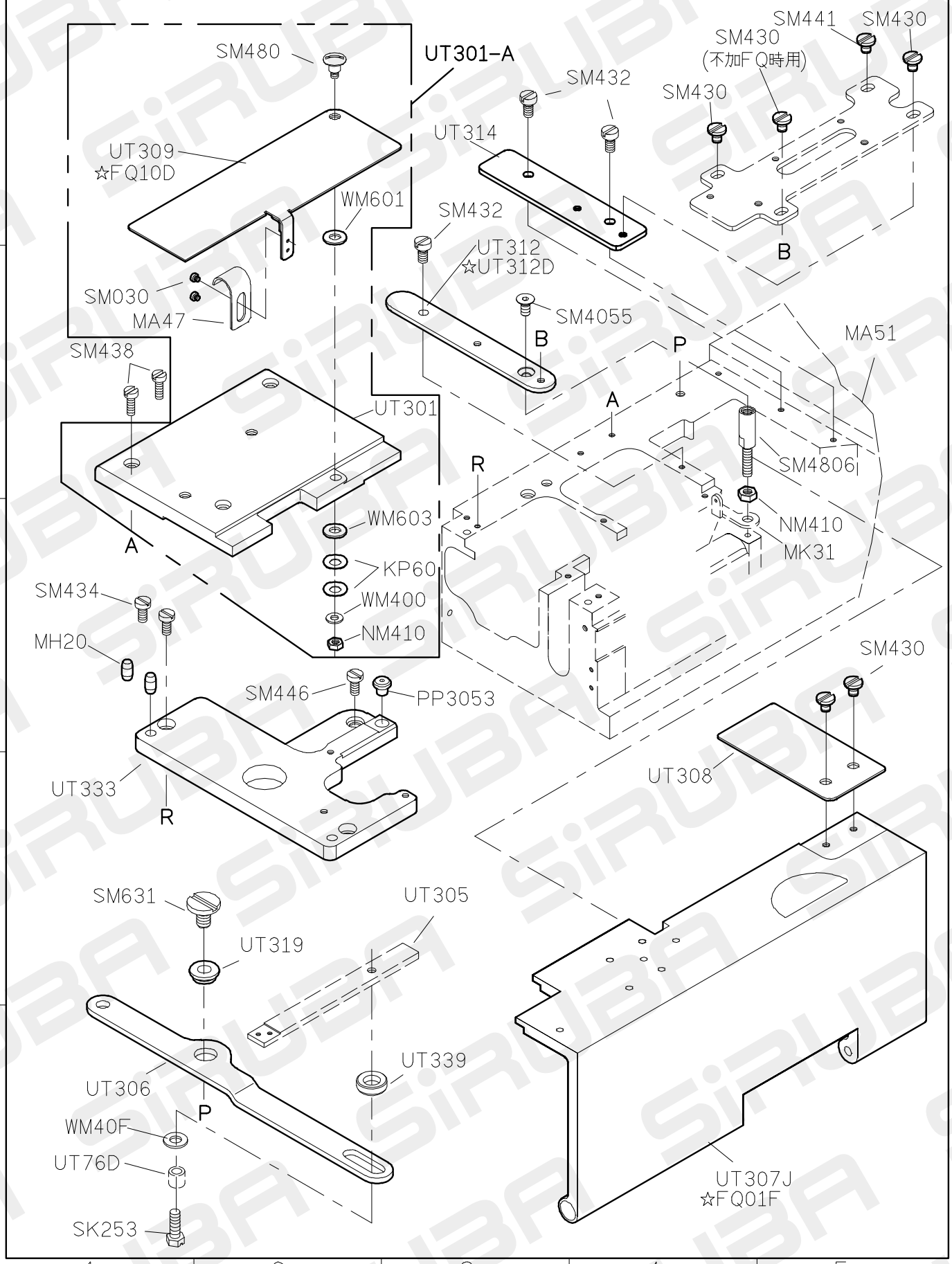

F007JD PARTS LIST FOR UTJ-J(UTK-J) GROUP P.3/12

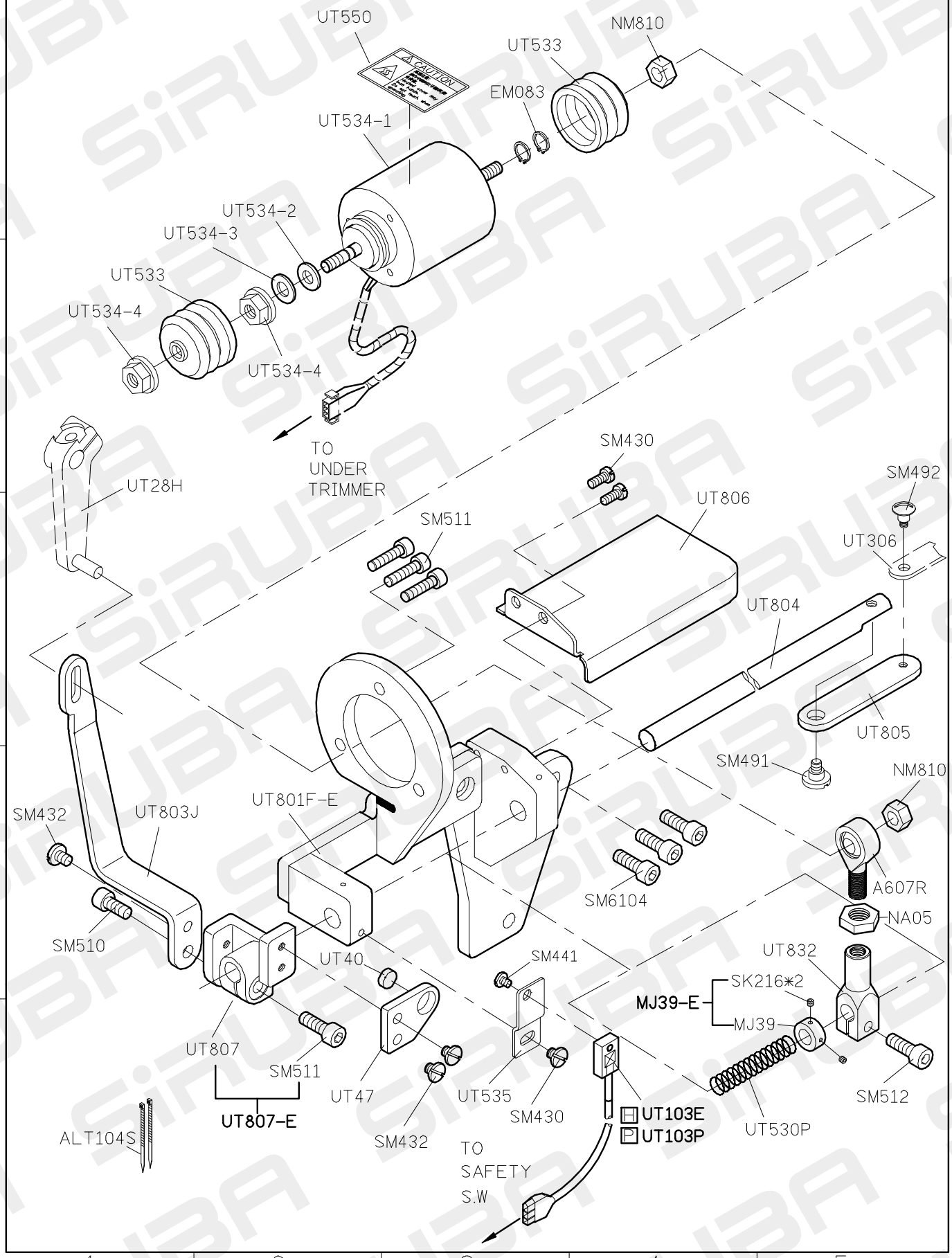

FOR F007J/F007JD/F858J/F858JD

H FOR H牌馬達
P FOR P牌馬達

10/07/01

F007JD PARTS LIST FOR UTJ(UTK) GROUP P.4/12

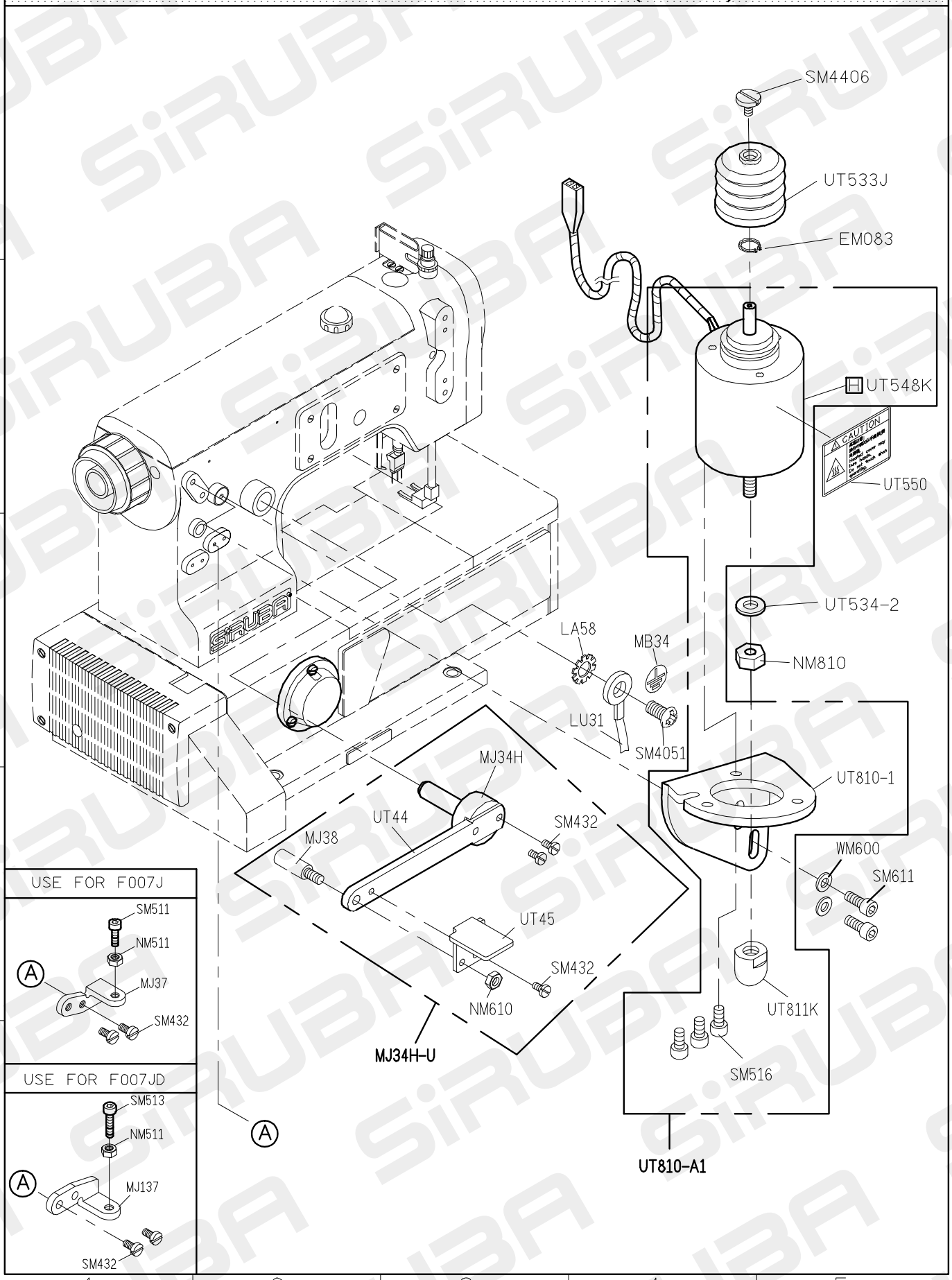

FOR F007J/F007JD/F858J/F858JD

"*"USE FOR F007JD/F858JD

H FOR H牌馬達

10/07/01

F007JD PARTS LIST FOR UTJ(UTK) GROUP P.5/12

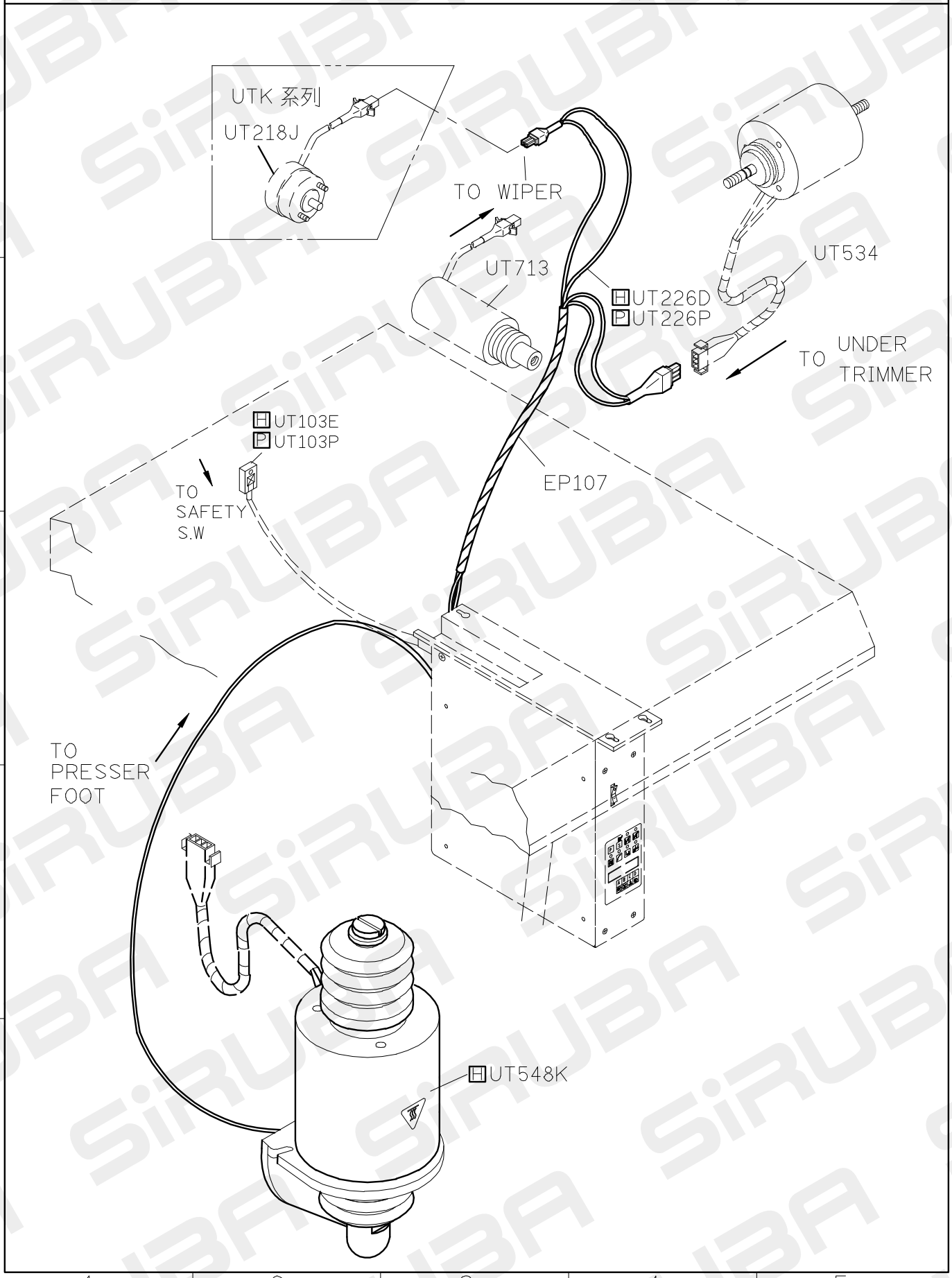

FOR F007JD/F858JD

H FOR H牌馬達(HVP-70)
P FOR P牌馬達

10/07/01

F007JD PARTS LIST FOR UTJ(UTK) GROUP P.6/12

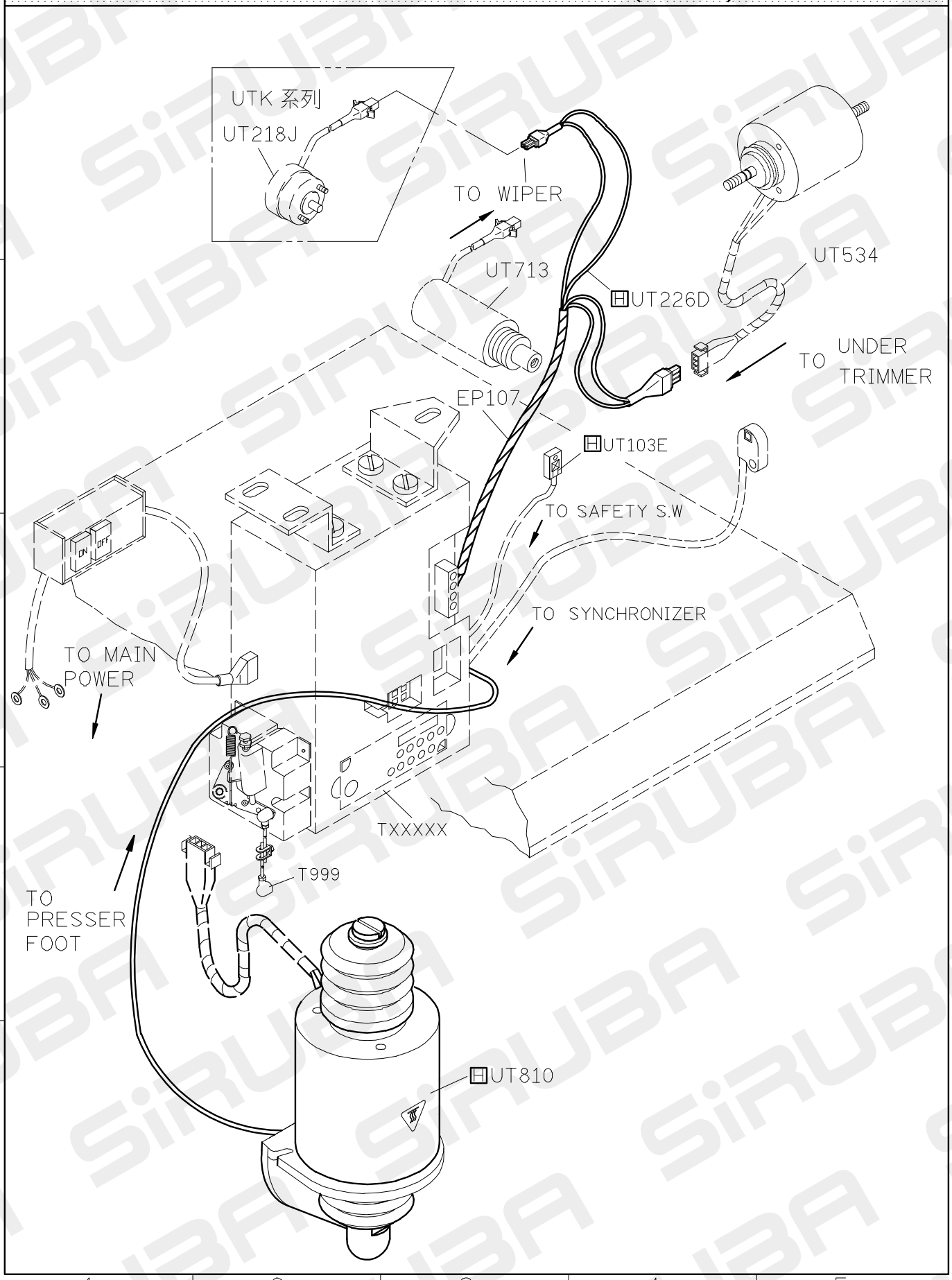

FOR F007JD/F858JD

H FOR H牌馬達 (HVP-20)
P FOR P牌馬達

10/07/01

F007JD PARTS LIST FOR UTJ-J(UTK-J) GROUP P.7/12

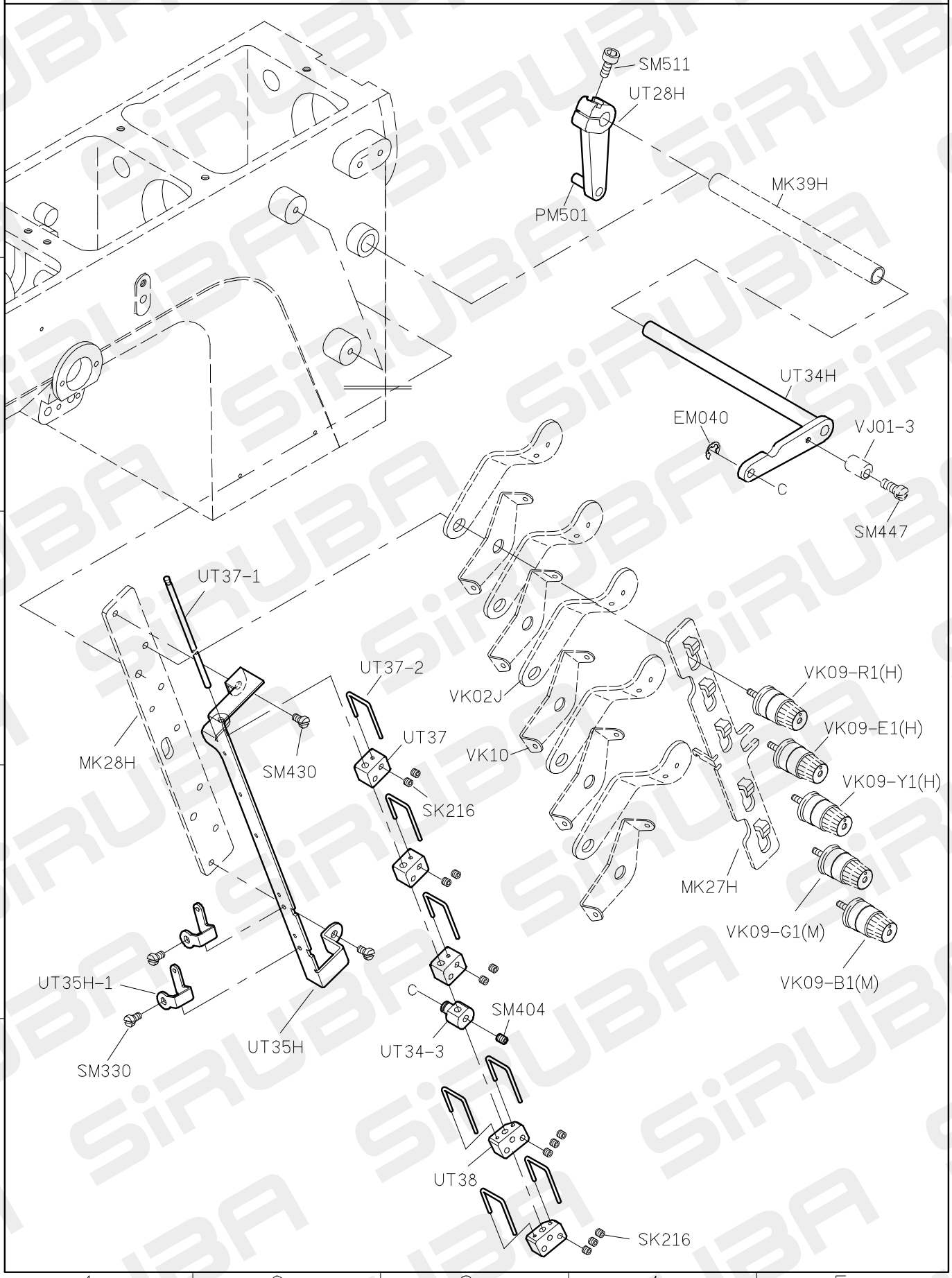

F007JD PARTS LIST FOR UTJ-J(UTK-J) GROUP P.8/12

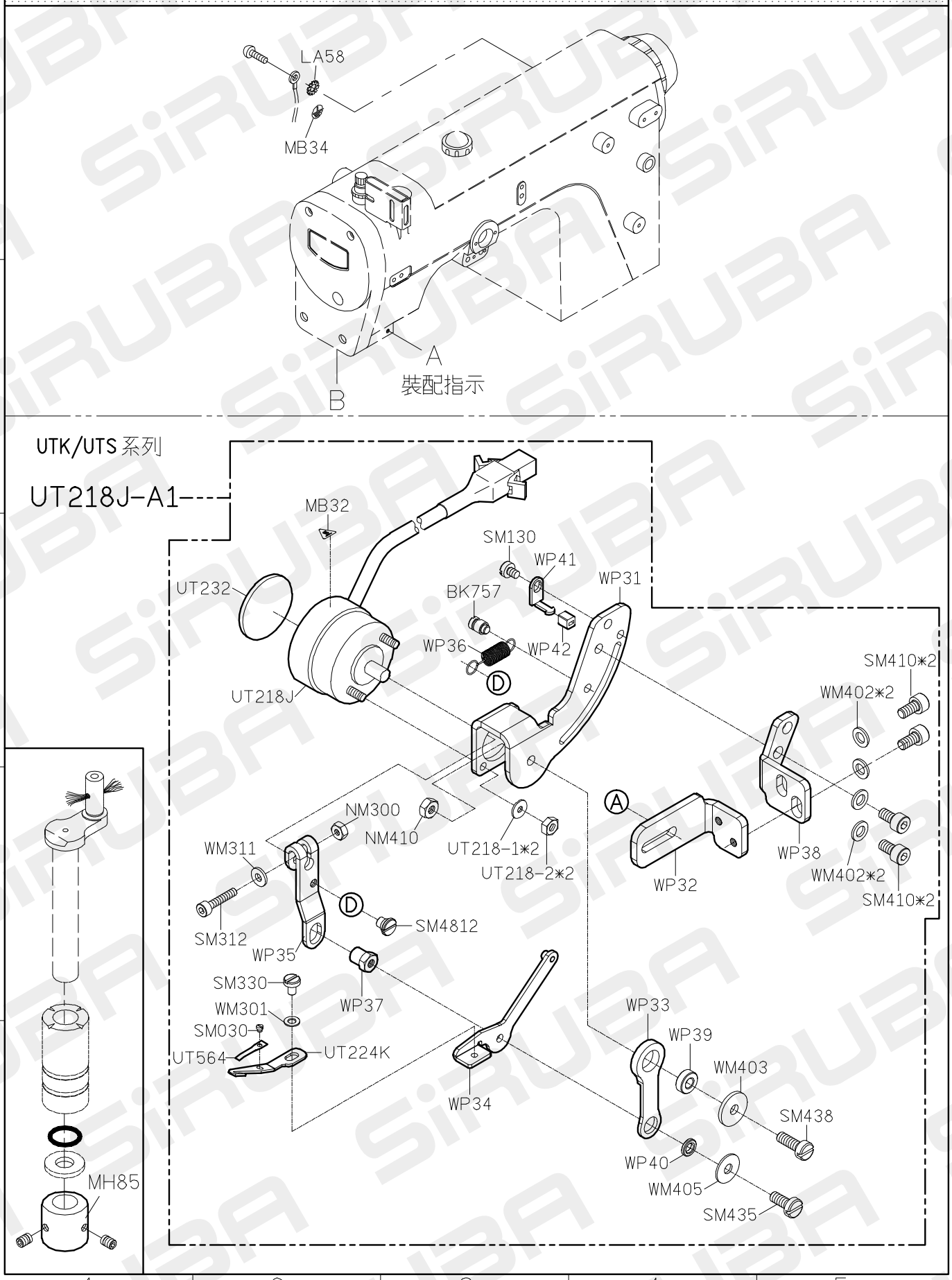
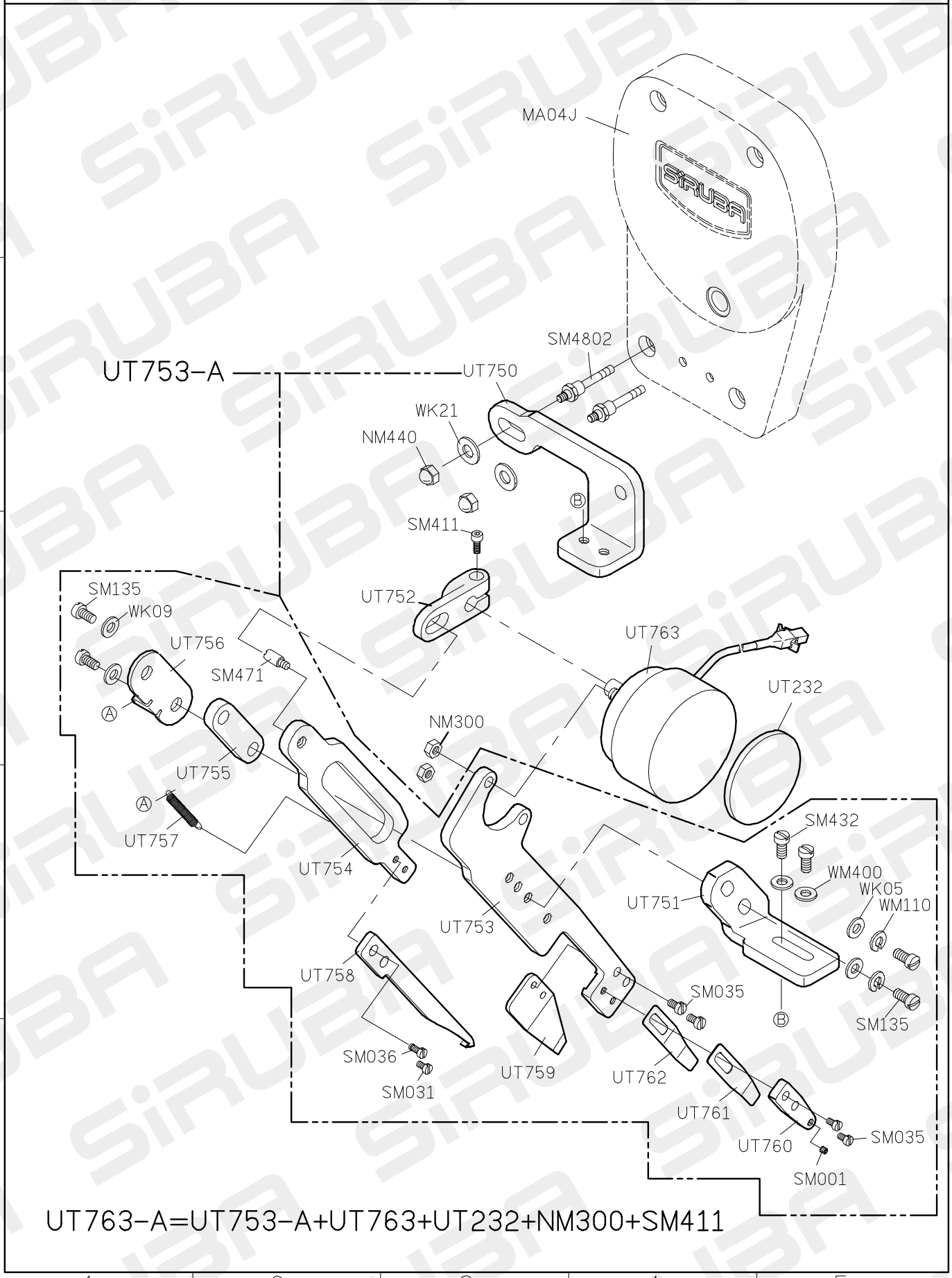
F007JD PARTS LIST FOR UTJ-J(UTK-J) GROUP P.9/12