cuTex®

AUTOMATIC RIBBON TAPE CUTTER

TBC-50H

TAEWOO CO., LTD

How to operate TBC-50H

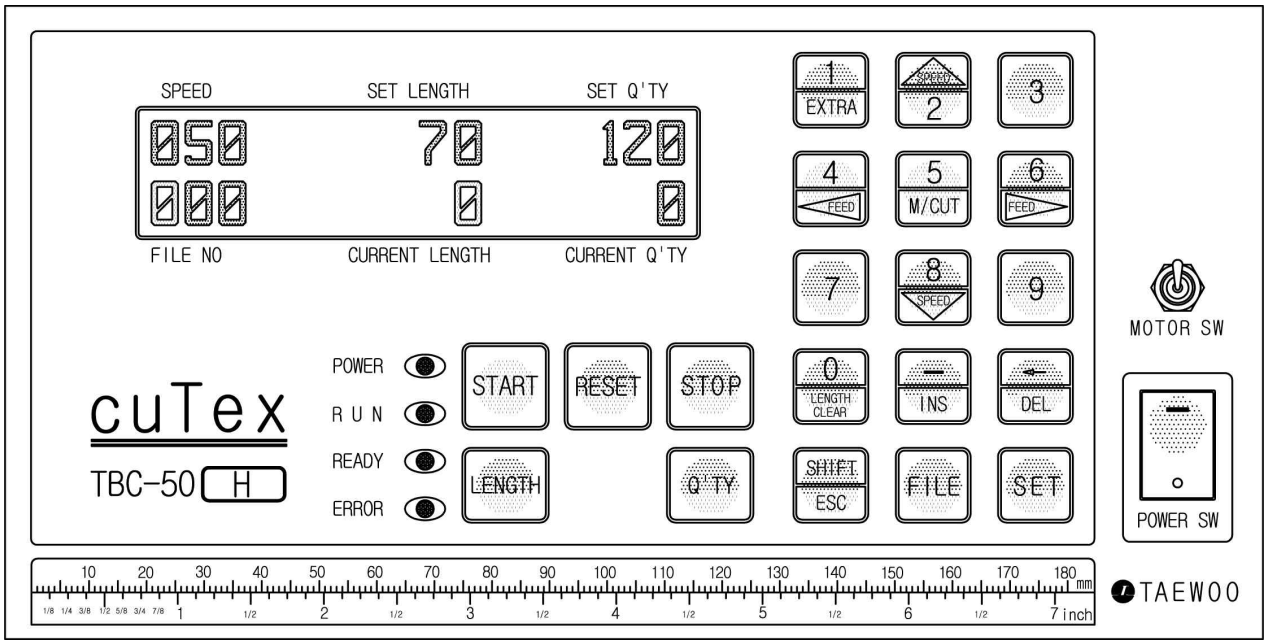

1. An example (Cutting length : 70mm, Cutting quantity : 120 pcs)

▷ Turn on the POWER SW.

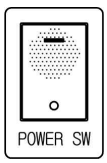

▷ Set the temperature.(It is normally used at 250°～350℃. About 5 minutes after turn-on & set it, it will be reached to set-temperature. (For more detail, refer to the appended "How to use temperature Controller KX4")

※ Caution : When a work is over, set the temperature at zero and turn the cooling fan 10 minutes or so and power off.

▷ Set cutting length. (Press the following buttons in order.)

☞ LENGTH ⇒ 7 ⇒ 0 LENGTH CLEAR ⇒ SET

▷ Set cutting quantity.

☞ Q'TY ⇒ 1 EXTRA ⇒ SPEED 2 ⇒ 0 LENGTH CLEAR ⇒ SET

▷ Running of knife-front roller

Turn on MOTOR SW to prevent cut materials from clinging to the knife blade.

▷ Press START button.

2. Key functions

: Current length on display will be back to “0” at a stop.

: All of current length and current q‘ty on display will be back to "0".

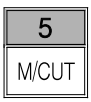

: Moving knife only.

① to cut the material for test.
② to take out the material jammed between knife blades.
③ for balancing of knife blades in exchange.

: Cutting additional one.

: Restoring to normal condition in ERROR(red LED)
- It don't remove number and length.
and inputting parameter or program.

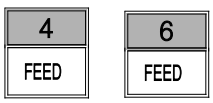

: to move the roller manually for mounting the material on the machine or for feeding it forwards or backwards.

— Speed up (The current speed appears on the left-upside of LCD display with "%". Normal speed : 50%, Maximum speed : 100%)

— Speed up (The current speed appears on the left-upside of LCD display with "%". Normal speed : 50%, Maximum speed : 0%)

*** Speed up & down is possible in any time(operation or stop) and set-speed will not be changed even though you press RESET button or power off & on.**

: to correct rang data.

FILE : Function for label cutting (applicable models : TBC-50S, TBC-50SH)
: To cut with sensor

: to prevent the cut material from clinging to the knife blade.
MOTOR SW (This switch is installed to Model TBC-50H, TBC-50SH, TBC-50HX only.)

3. Specification

Model Name	Main Cutting Materials	Cutting Knife	Power Supply	Max. Cutting Width	Range of Cutting Length	Cutting Q'ty/min. (Length: 50mm)	Machine Size (Net Weight)	Packing Size (Gross weight)
TBC-50H (Ribbon Tape cutter)	Ribbon tape, Small webbing	Hot	AC110/220V 50/60Hz	90mm	15mm~ 300M	120 ~ 140 cuts	820×370×380 (20.5kgs)	540×470×430 (25kg)

4. Caution for use

- Before use, please confirm the voltage and make ground(earth) connection.
- Do not access hands or any object close to the working knife. (for safety)
- When the knife blade becomes dull, please use it after grinding with the grinding machine. (Please do not let the unskilled person grind manually or install the knife blade.)

EXCHANGE OF KNIFE

① First of all, move up the upper knife to top level and power off and take off the presser of upper knife after unscrewing 2 bolts by 4mm-wrench.
② Take off the upper knife frame by 6mm-wrench.

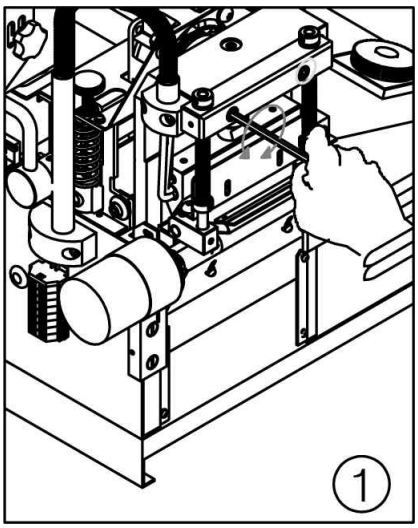

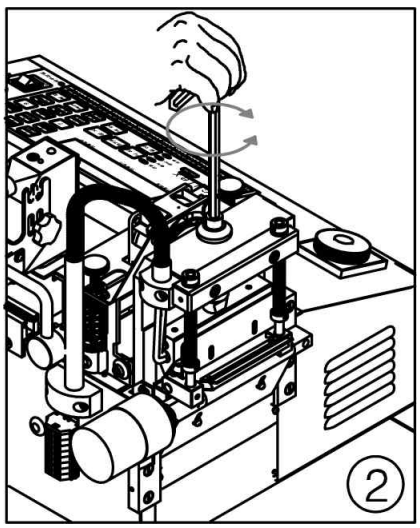

③ Take off the heater after unscrewing the fixing bolt by 4~5mm-wrench.
(Install new upper knife and assemble it again vice versa.)

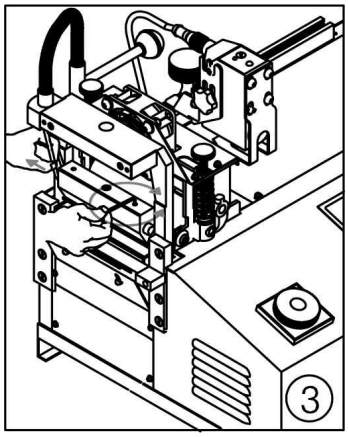

④ If necessary to exchange the lower knife plate, unscrew bolts of the front feeding motor.
⑤ Unscrew bolts of the front feeding roller and take off the motor & the roller.
⑥ Take off the cap by unscrewing bolts.
⑦ Unscrew 3 fixing bolts by 7mm-spanner and take off the lower knife plate.
⑧ If no cutting or one sided cutting, make the upper knife contacted to the lower knife plate and check the level between upper knife & lower knife plate and power off & adjust gap or pressure by 7mm-spanner. (Clockwise turn of spanner makes the lower knife plate up, anti-clockwise turn makes it down.)

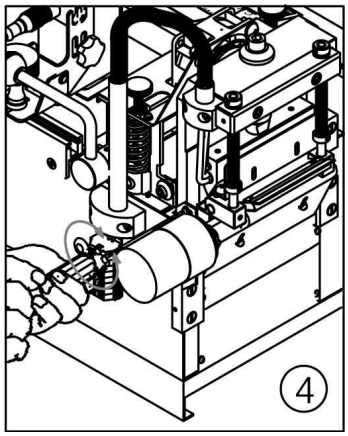

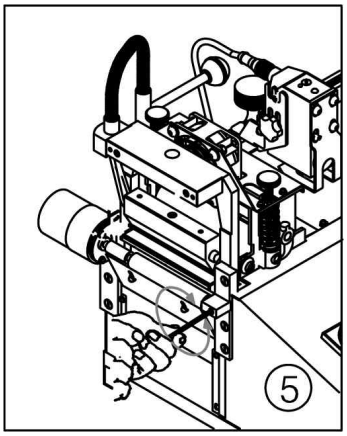

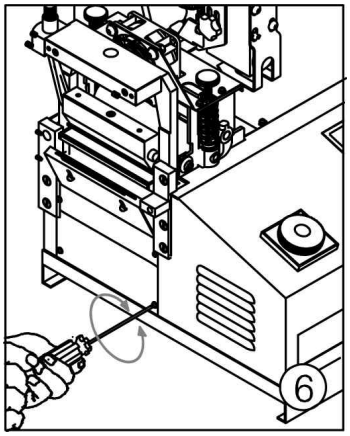

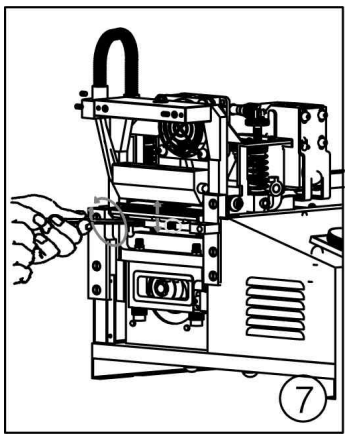

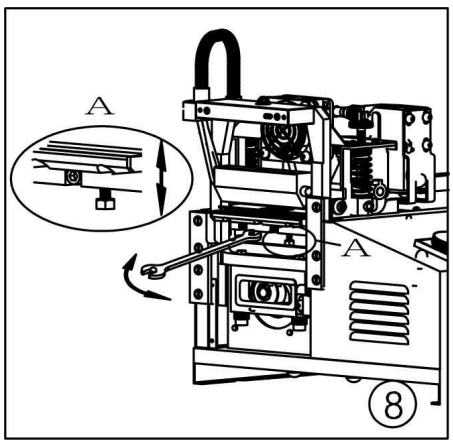

Mount of roll

Fix the roll triangle by 4mm-wrench.

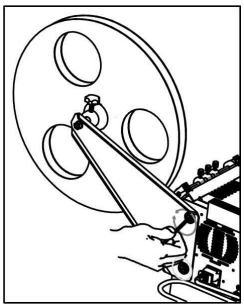

Exchange of fuse

Take off the power plug and exchange as picture.

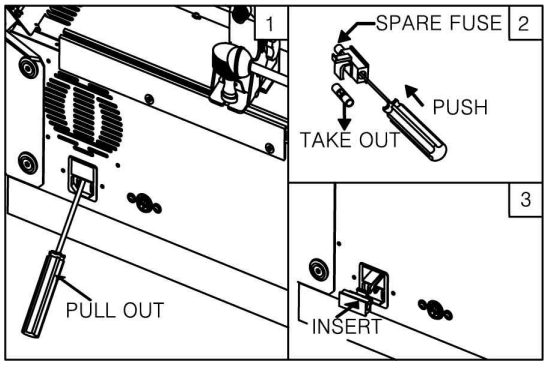

How to solve hairy-label problem

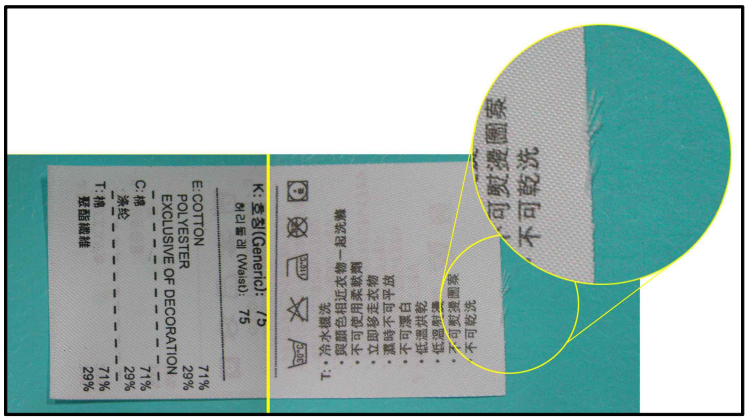

Sometimes you can see a label, one side is sealed well, but the other side is not sealed well.
Just like left image.
This problem is caused by the wrong height of the front feeding (upper) roller.
Here we'll call "pressing roller" "upper front feeding roller".

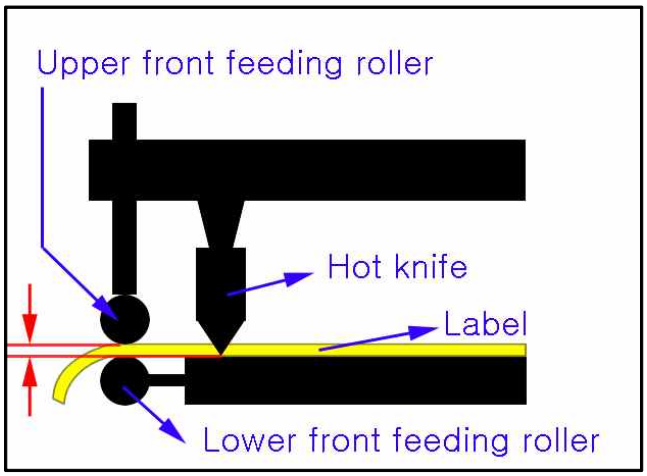

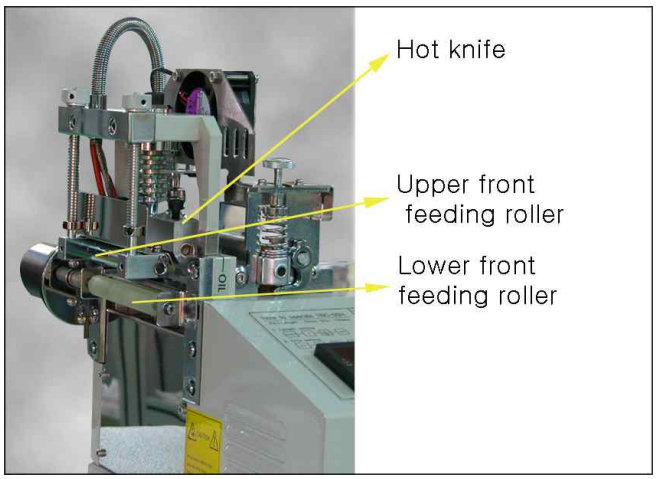

The left-above image shows the ideal height, between upper front feeding roller and hot knife.

When the hot knife moved down completely, the gab between upper front feeding roller and lower front feeding roller should be the same with thickness of label. In this case, the label can have proper time to be sealed and then be pulled out well.

Next page, you can see some problems caused by wrong height of upper front feeding roller.
If it is higher than hot knife, the material won't be pulled out, so cut labels would stick to hot knife.
And the upper front feeding roller is lower than hot knife, the front feeding roller will pull out the label before the label is sealed well.
So the other side will be hairy.

Case 1. The front feeding roller is higher than hot-knife.

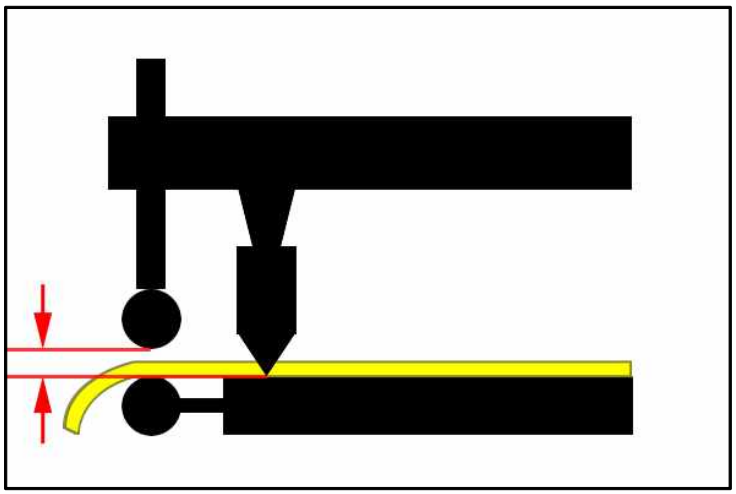

As you can see left image, the upper front feeding roller is higher than hot-knife.
In this case, the label can't be pulled out. So the label will stick to hot knife.
And you can see the labels as blow image.

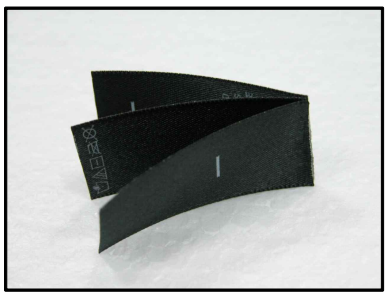

You can also see left image, when you turned off the front feeding roller switch.

Case 2. The front feeding roller is lower than the hot-knife.

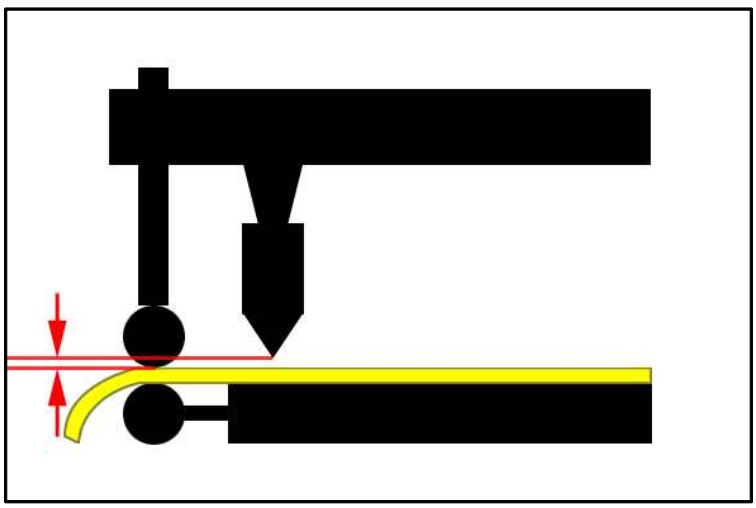

As you can see left image, the upper front feeding roller is lower than hot-knife.
In this case, the front feeding roller pulled out the label before the label is sealed well.
So the one side is sealed well and the other side is hairy, just like below image.

The next page, you can see how to adjust the height of upper front feeding roller.

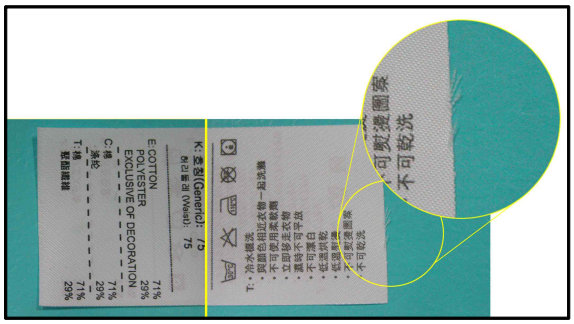

Please set proper height of upper front feeding roller, refer to below images.

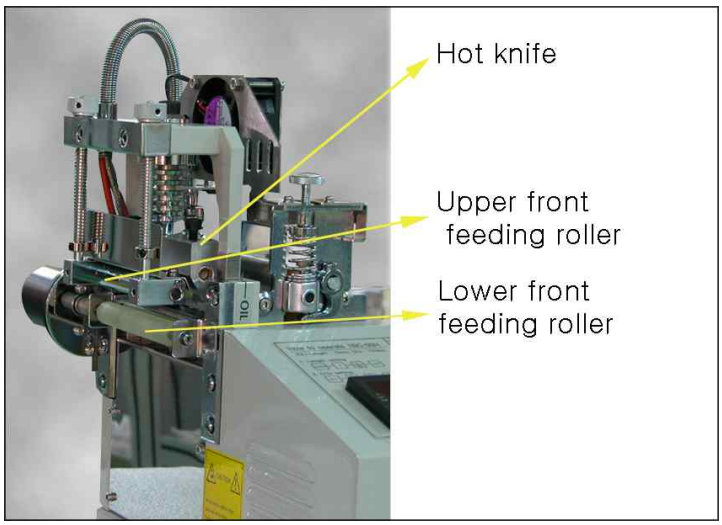

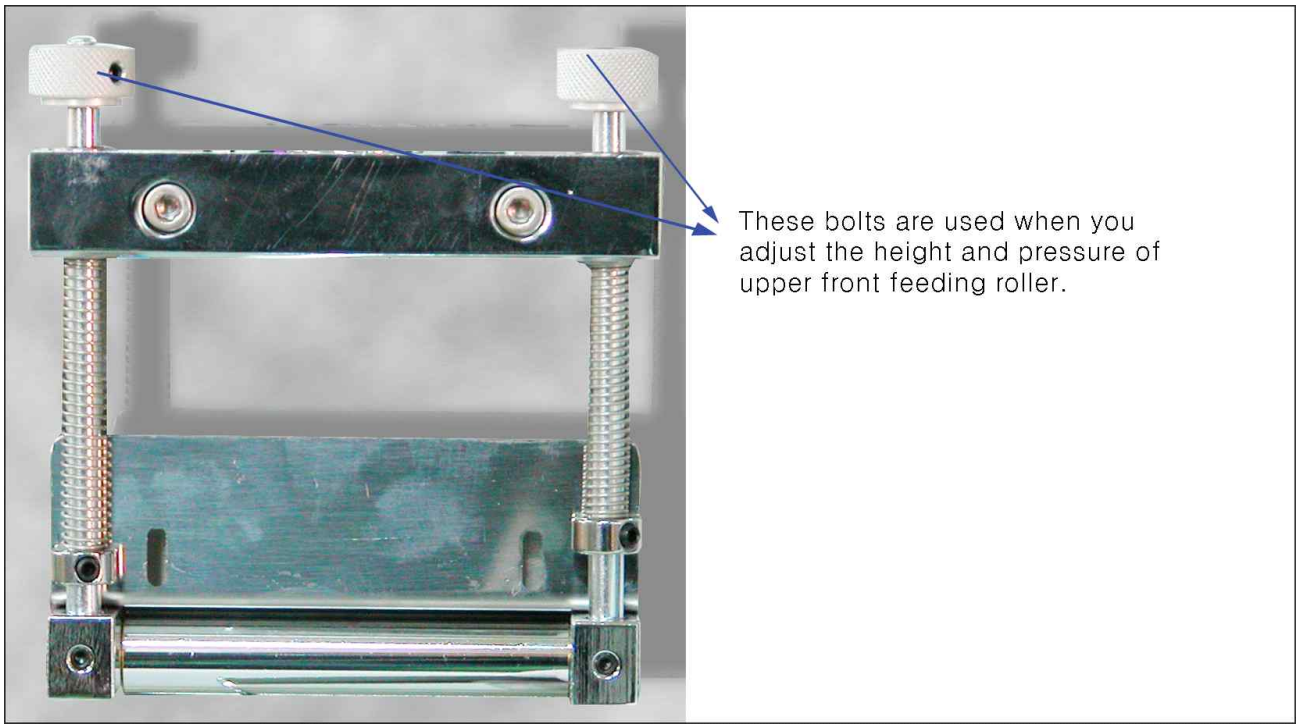

If you need any further information, please contact us at any time.

Mail : cutex@chol.com

How to use cleaning device

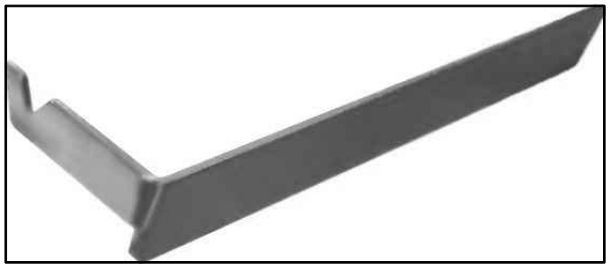

At first, please set the knife's temperature to 250℃~300℃ degrees.
And wait until it reaches set temperature.
Please turn off machine,
before cleaning the knife blade.

1. Please raise up the pressing roller set.

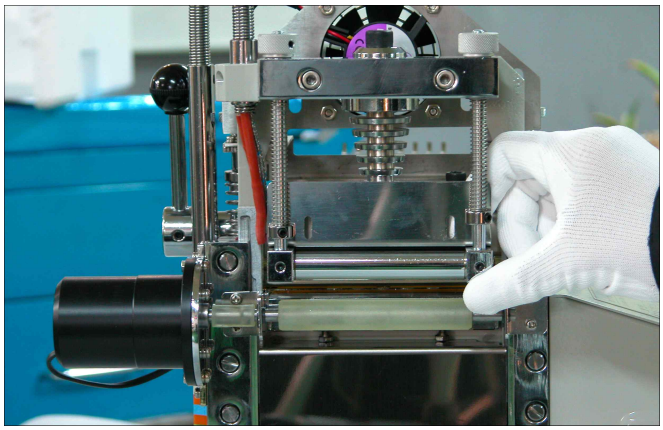

2. Scrape dregs off.

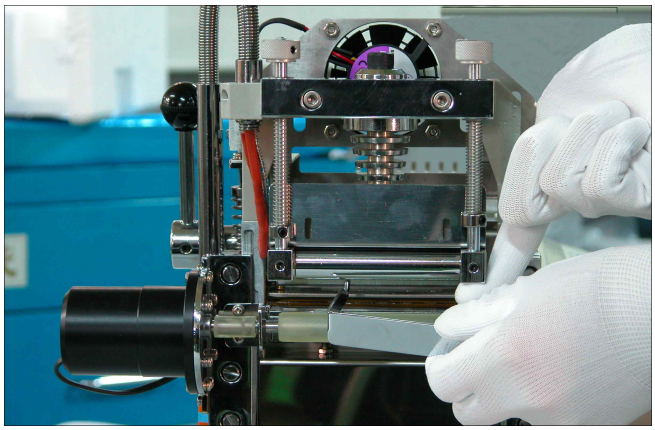

3. After cleaning, please take down pressing roller set back.

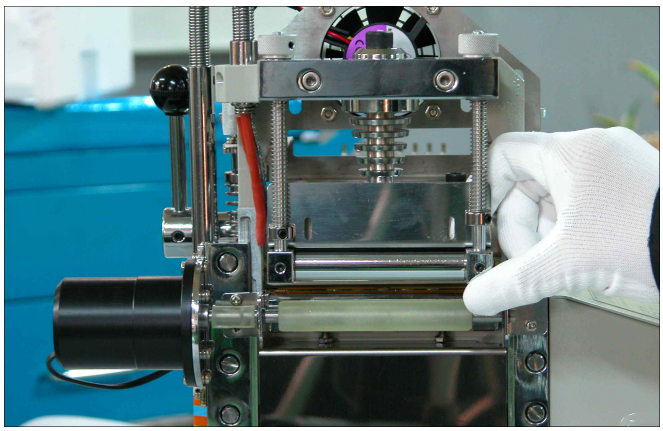

TBC-50H Part Drawing A (Feeding part)

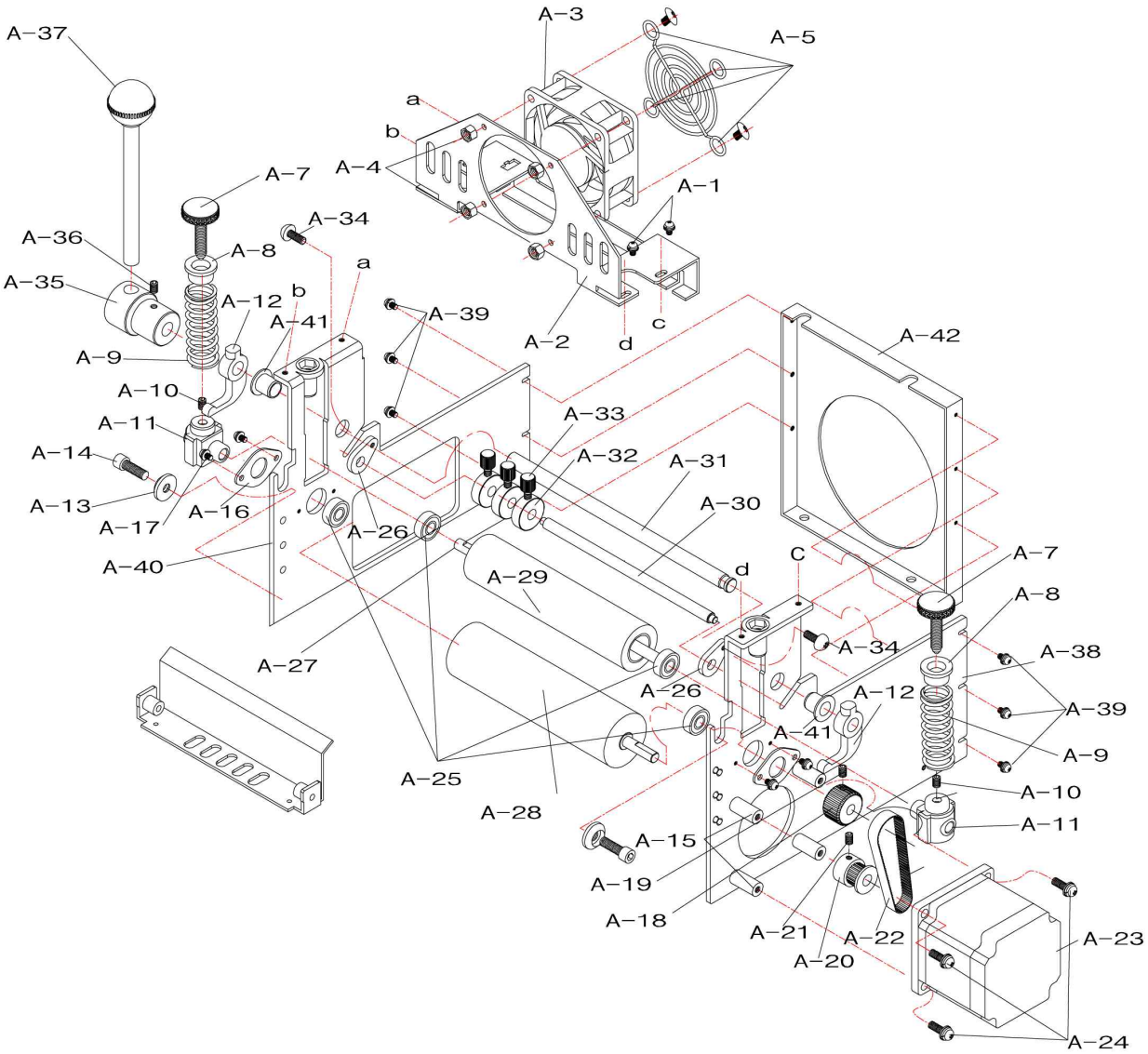

TBC-50H Part List A (Feeding part)

Part No.	Description	Part No.	Description
A-1	Clamping Bolt(M3×5L)	A-23	Stepping Motor
A-2	Upper Cap of Cooling Fan	A-24	Clamping Bolt(M4×13L)
A-3	Cooling Fan(Small)	A-25	Ball Bearing(#696)
A-4	Check Nut(M4)	A-26	Guide-clamping Bracket
A-5	Clamping Bolt(M4×10L)	A-27	Stopper
A-6	Safety-grill of Cooling Fan	A-28	Lower Roller
A-7	Pressure-control Bolt	A-29	Upper Roller
A-8	Pressure-control Spring Cover	A-30	Front-guide Pin
A-9	Pressure-control Spring	A-31	Lever Shaft
A-10	Detent Screw(M4×6L)	A-32	Guide Ring
A-11	Slide Block of Upper Roller	A-33	Knob Bolt of Guide Ring
A-12	Slide Lever	A-34	Round Screw(M4×5L)
A-13	Clamping Washer	A-35	Lever Bracket
A-14	Wrench Bolt(M4×14L)	A-36	Clamping Bolt(M5×5L)
A-15	Tie Bar of Stepping Motor	A-37	Lever
A-16	Bearing Cover	A-38	Right Roller Bracket
A-17	Clamping Bolt(M3×5L)	A-39	Clamping Bolt(M3×5L)
A-18	Feed-timing Gear(MXL30T)	A-40	Left Roller Bracket
A-19	Detent Screw(M4×6L)	A-41	Oilless
A-20	Drive-timing Gear(MXL20T)	A-42	Space Plate of Roller Bracket
A-21	Detent Screw(M3×6L)		
A-22	Timing Belt(MXL75)		

TBC-50H Part Drawing B (Cutting part)

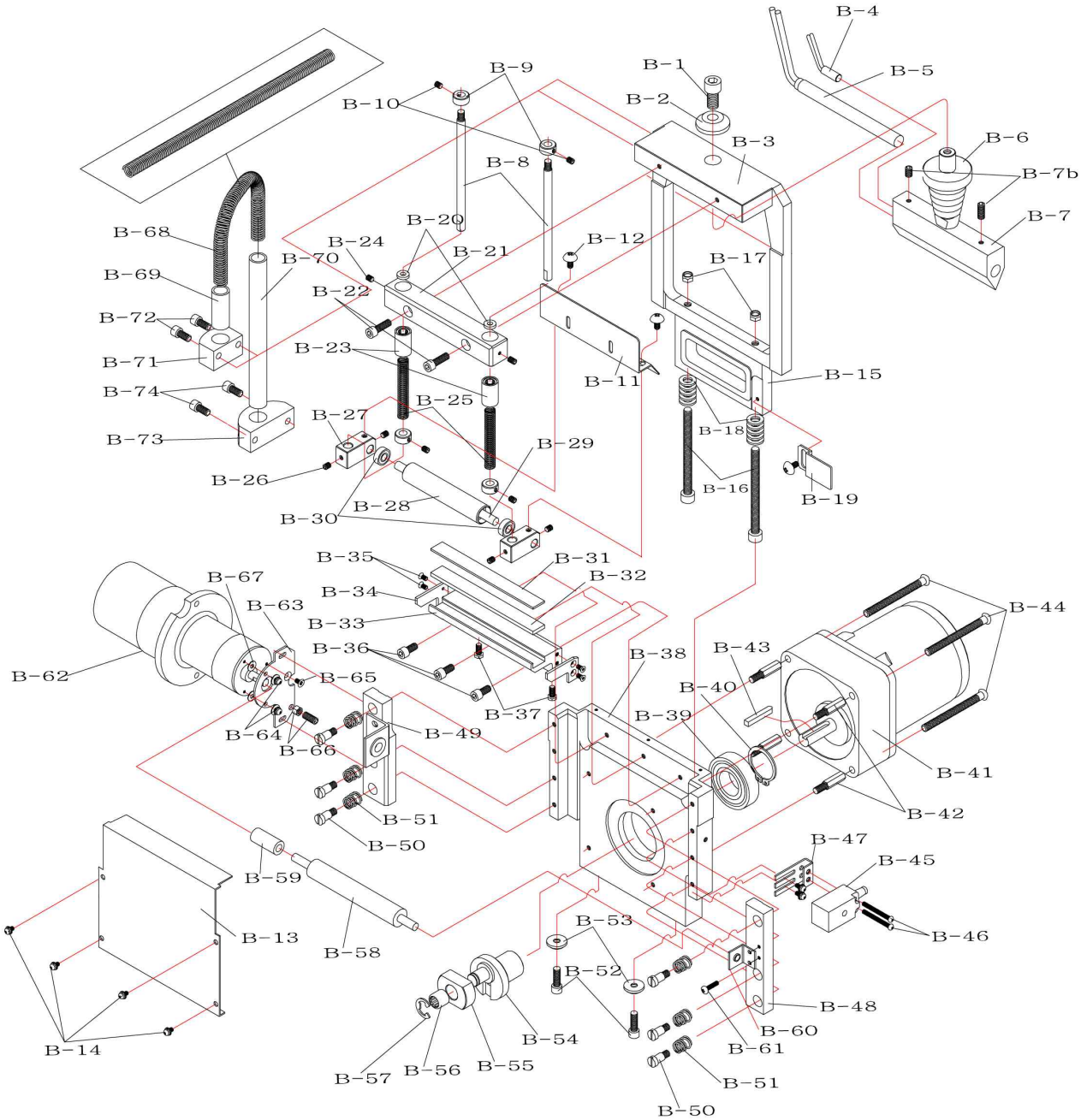

TBC-50H Part List B (Cutting part)

Part No.	Description	Part No.	Description
B-1	Clamping Bolt(M8×15L)	B-38	Lower Knife Case
B-2	Neck Washer of Hot-knife Bracket	B-39	Ball Bearing(#6004)
B-3	Upper Knife Case	B-40	Snap Ring
B-4	Heat Sensor	B-41	Motor＋Reduction Gear
B-5	Heater	B-42	Motor Supporter
B-6	Hot-Knife Bracket	B-43	Motor Key
B-7	Hot-Knife	B-44	Clamping Bolt(M5×42L)
B-7b	Detent Screw(M5×8)(M6×20)	B-45	Counting Sensor
B-8	Vertical Axle	B-46	Clamping Bolt(M3×18L)
B-9	Shaft Ring	B-47	Clamping Bracket
B-10	Detent Screw(M4×4L)	B-48	Right Pressure Plate
B-11	Pressing Plate Cover	B-49	Left Pressure Plate
B-12	Clamping Bolt(M4×6L)	B-50	Clamping Bolt of Pressure Plate
B-13	Front Cover	B-51	Pressure Spring
B-14	Clamping Bolt(M3×5L)	B-52	Wrench Bolt(M5×15L)
B-15	Slide Ram	B-53	Neck Washer
B-16	Clamping Bolt(M6×75L)	B-54	Crank Bundle
B-17	Check Nut(M6)	B-55	Cam
B-18	Flat-head Washer Spring	B-56	Niddle Bearing
B-19	Counting-sensor Bracket	B-57	E-Ring
B-20	Shaft Rubber-bushing	B-58	Front Feeding Roller
B-21	LM Guide	B-59	Front Feeding Sub-roller
B-22	Wrench Bolt(M5×20L)	B-60	Roller Shaft Bracket
B-23	LM Bearing	B-61	Clamping Bolt(M3×12L)
B-24	Detent Screw(M4×6L)	B-62	DC Motor
B-25	Verical Axle Ring	B-63	DC Motor Bracket
B-26	Detent Screw(M4×6L)	B-64	Clamping Bolt(M3×4L)
B-27	Roller-clamping Bracket	B-65	Flat-head Bolt(M3×4L)
B-28	Pressing Roller	B-66	Vertical Control Nut
B-29	Roller Shaft	B-67	Flat Washer
B-30	Ball Bearing(#686)	B-68	Heater Wiring Spring
B-31	Heating Plate	B-69	Heater Wiring Pipe(1)
B-32	Silicon Plate	B-70	Heater Wiring Pipe(2)
B-33	Heating Plate Bracket	B-71	Upper Pipe Bracket
B-34	Bracket Side Cover	B-72	Wrench Bolt(M4×15L)
B-35	Flat-head Bolt(M3×8L)	B-73	Lower Pipe Bracket
B-36	Wrench Bolt(M5×15L)	B-74	Wrench Bolt(M4×15L)
B-37	Hexagon-head Bolt(M4×8L)		

TBC-50H Part Drawing C (Other part)

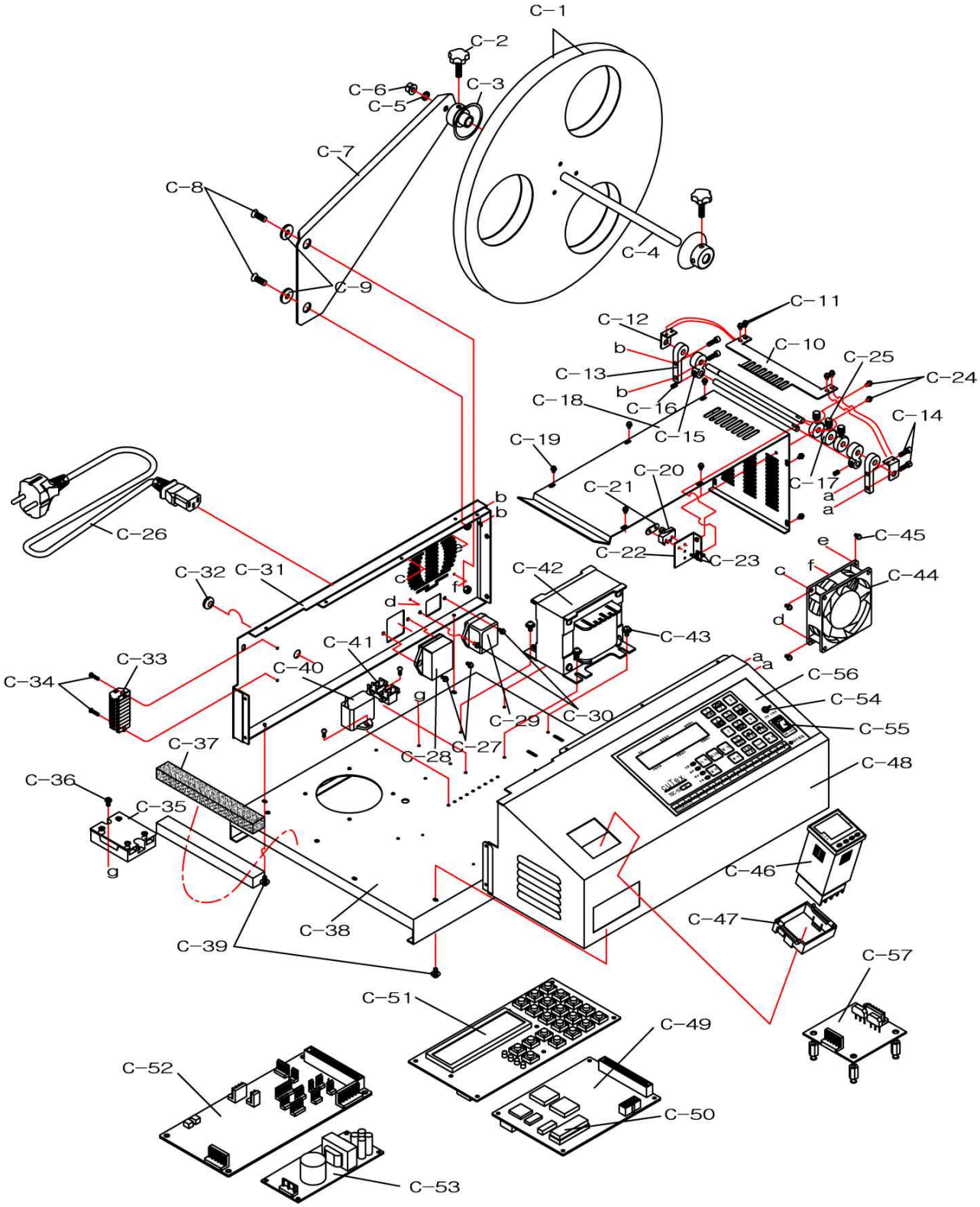

TBC-50H Part List C (Other part)

Part No.	Description	Part No.	Description
C-1	Roll-hanger Wheel	C-30	Clamping Bolt(M3×5L)
C-2	Clamping Bolt of Holder	C-31	Left Cover
C-3	Holder	C-32	Rubber Bushing
C-4	Roll-hanger Shaft	C-33	Separated Terminal
C-5	Roll-hanger Shaft Washer	C-34	Clamping Bolt(M3×6L)
C-6	Check Nut(M6)	C-35	SSR(Solid State Relay)
C-7	Roll Hanger	C-36	Clamping Bolt(M4×8L)
C-8	Flat-head Bolt(M6×16L)	C-37	Sponge
C-9	Neck Washer of Roll-hanger	C-38	Base
C-10	Existence Detector	C-39	Clamping Bolt(M4×8L)
C-11	Clamping Bolt(M3×5L)	C-40	Condenser
C-12	Clamping Bolt	C-41	Terminal
C-13	Rear Guide-pin Bracket	C-42	Transformer
C-14	Wrench Bolt(M4×15L)	C-43	Clamping Bolt(M4)
C-15	Rear Tension-guide Block	C-44	Cooling Fan(Large)
C-16	Detent Screw(M4×6L)	C-45	Clamping Bolt(M3×6L)
C-17	Guide Ring	C-46	Temperature-controller (KX4)
C-18	Upper Guide Plate	C-47	Temperature-controller Socket
C-19	Clamping Bolt(M3×5L)	C-48	Control Cover
C-20	Micro Limit Switch	C-49	Control Circuit Board(MB)
C-21	Plate Nut	C-50	ROM
C-22	Limit Switch Bracket	C-51	Operation Circuit Board(OP)
C-23	Clamping Bolt(M2×10L)	C-52	Drive Circuit Board(DR)
C-24	Clamping Bolt(M3×5L)	C-53	SMPS(Power Supply,SP)
C-25	Knob Bolt	C-54	Toggle Switch
C-26	Power Cord	C-55	Power Switch
C-27	Clamping Bolt(M3×5L)	C-56	Urethane Panel
C-28	AC Connector(IN-PUT)	C-57	Rectification Board
C-29	AC Connector(OUT-PUT)		

HOW TO DO AUTO-TUNING

After changing a part or parts (temp. sensor or heater or temp. controller), you can experience that there are much temperature-deviation between set temperature(SV) and present temperature(PV).
In this case, by auto-tuning, you can reduce temperature-deviation between SV and PV.

Please do follow steps for auto-tuning.

- Referring manual, please set your common temperature. (ex, 300℃)

- After PV's reaching set temperature, press "SET" and "∧" simultaneously.
  (referring to below image(left))
  If so, with AT lamp blinks, auto-tuning begins.

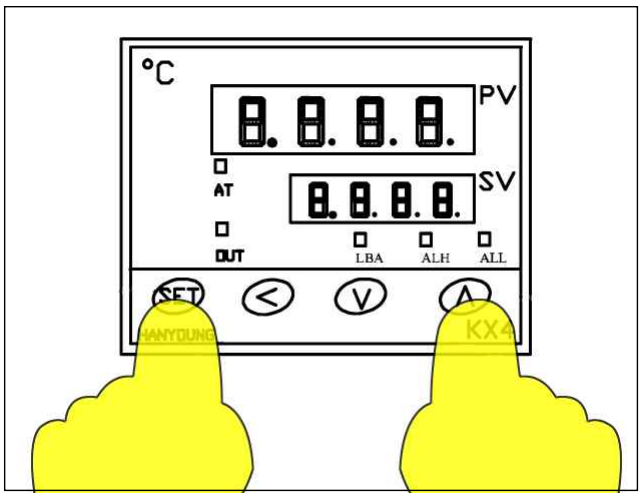

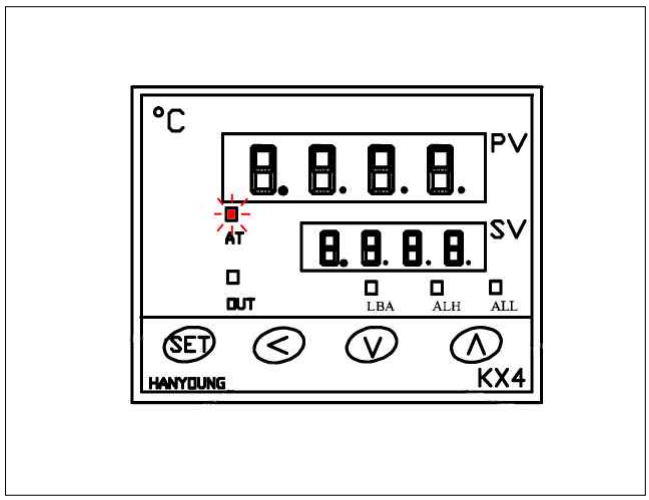

- After finishing auto-tuning, AT lamp will turn off.

- While auto-tuning, if you want to stop auto-tuning, plesae press "SET" and "∧" simultaneously. If so, AT lamp turns off and auto-tuning stops.

- If you change SV (set temperature) during auto-tuning, auto-tuning stops and temp. controller will use previous parameter.

(How to use Temperature Controller KX4)

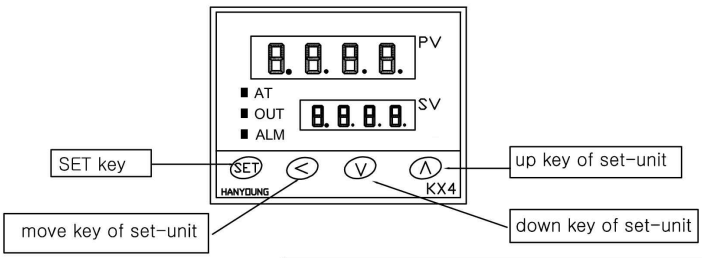

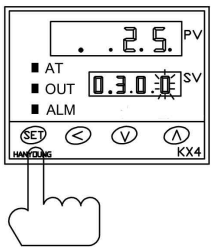

When you power on the controller, PV shows current room temperature and SV shows set temperature.
Recommendation is 250℃~350℃.
After turn-on & set, within 10 minutes, it reaches to set temperature.

① You can enter set mode by pressing SET key, you may see one cipher blinks. It means it can be changed.

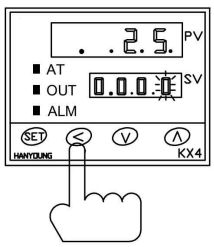

② By pressing < key, you can move between numbers of four ciphers. as follows.

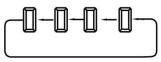

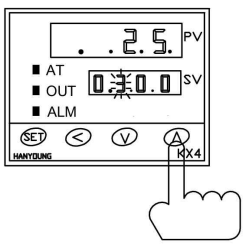

③ Set desirous temperature by pressing ∧ and ∨ keys.(i.e :300℃).
Set-temperature will be increased by ∧ key and it will decreased by ∨ key.

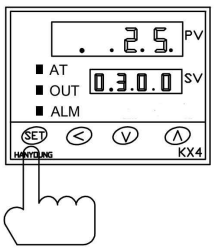

④ After finshing setting, press SET key once more. Then, it stops blinking. And the controller will return to auto-tuning mode.

⚠ CAUTION

At beginning, when you power on, there will be some variation in temperature. But it will be automatically reached to the set temperature soon.

Trouble-shooting of TBC-50 series

No	Troubles		Appicable model	Causes & Measures
1	No power supply		All models	- Check if electric cord is connected well. - Check if the fuse blows out or not.
2	Power is on, but no work	Feeding roller doesn't work.	All models	- Check if there is inserted any alien substance in roller. - If current length on display is changed, exchange drive board. - If current length on display is not changed, exchange Control board(MB).
		Knife doesn't work.	All models	- Check if pressure plates of upper knife are too much fastened or not.
		LCD display doesn't work.	All models	- After opening the cover, check the connetion. (especially between Operation & MB board)
		All functions don't work	Al models	- Check if auto-stop device lies down. If any, raise it up.
3	Material is not cut.		Hot cutter (H, LH, SH, HX)	- Check if temperature goes up to set-degree. - Check if knife blades are even(parallel).
4	Material is cut onesidedly.		All models	- Check if blades are damaged or weared. - After making both knives close each other by M/CUT button and check if they are even or not. (If they are not even, adjust them by bolts)
5	Cut-length is different from set-length.		All models	- Test cutting after loosening material from the reel by hand or attaching feeding device.
6	It cuts before the cutting line of labels.		Label cutter (S, SH)	- Move the sensor towards knife side as long as the difference by pushing.
7	It cuts after the cutting line of labels.		Label cutter (S, SH)	- Move the sensor towards counter-knife side as long as the difference by pushing.
8	ERROR on LCD & LED	ERROR CODE [064] >Sensor check Er	Label cutter (S, SH)	- Trouble in Mark sensor → · Check if the sensor is connected well or not. · Check if the sensor is adjusted well or not. (FILE NO 001) · Check if it is label problem or not.
		ERROR CODE [065] >CUT I/O Error!	All models	- Trouble in cutting motor or cutting sensor → · Upper knife moves 1~3 sec. and ERROR on display. Check the connection of cutting sensor. If not, exchange the cutting sensor. · Upper knife doesn't move and ERROR on display. Exchange the cutting motor or drive board.
		STOP INPUT !! CHECK STOP INP!	All models	- Auto stop device is pressed down or shortage. → raise up the device and check shortage.
		(C)ACORD CTRL-OP AMC-T3KA VER1.7D	All models	- Bad connected ROM → Press ROM by hand or connect it again. (If not, change MB board)
		ERROR CODE[065] >CHECK CODE[003]	All models	- Change of FILE 003 in program by noise or mis-operation → Initialize the controller. ※ **How to Initialize**(programs to be initial) : press **SET**+**SHIFT/ESC** buttons and **RESET** button at the same time. (Press **RESET** later than other two keys.)
9	Operator feels electric current in touch of machine.		All models	- Connect the earth cord(green) to any bolt of backside of machine.
10	After exchange ROM, you should do initialize the controller, due to error message, if you cannot do initialization, please press "SHIFT/ESC' button to escape error message screen and then initialize the controller.			

Please contact following address for further information.

(주) 태우정밀
TAEWOO CO., LTD.

ADDRESS: B-501, 234, DEOKSO-RO, WABU-EUP
NAMYANGJU-SI, GYEONGGI-DO, KOREA
(Postcode : 472-908)
TEL. : +82 31 521-6904~7
FAX : +82 31 521-6908
E-mail : taewoo@cutex.co.kr
Web : http://cutex.co.kr

Please do not disassemble / modify machine or its part without any permission.
If you disassemble / modify machine or its part, you cannot receive warranty/after-sales service.